MAVERICK

MK1 HYBRID

User Manual

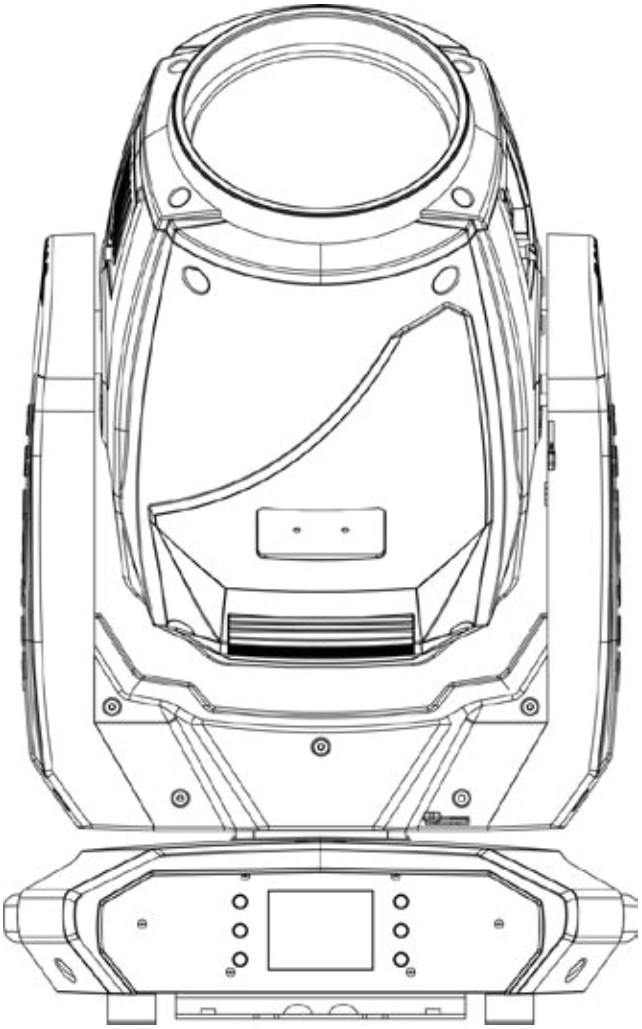

CHAUVET PROFESSIONAL

Edition Notes

The Maverick MK1 Hybrid User Manual Rev. 7 covers the description, safety precautions, installation, programming, operation, and maintenance of the Maverick MK1 Hybrid. Chauvet released this edition of the Maverick MK1 Hybrid User Manual in 2018.

Trademarks

CHAUVET, the Chauvet logo and Maverick MK1 Hybrid are registered trademarks or trademarks of Chauvet & Sons, LLC. (d/b/a Chauvet and Chauvet Lighting) in the United States and other countries. Other company and product names and logos referred to herein may be trademarks of their respective companies.

Copyright Notice

The works of authorship contained in this manual, including, but not limited to, all design, text and images are owned by Chauvet.

© Copyright 2018 Chauvet & Sons, LLC. All rights reserved.

Electronically published by Chauvet in the United States of America.

Manual Use

Chauvet authorizes its customers to download and print this manual for professional information purposes only. Chauvet expressly prohibits the usage, copy, storage, distribution, modification, or printing of this manual or its content for any other purpose without written consent from Chauvet.

Document Printing

For better results, print this document in color, on letter size paper (8.5 x 11 in), double-sided. If using A4 paper (210 x 297 mm), configure your printer to scale the content accordingly.

Intended Audience

Any person in charge of installing, operating, and/or maintaining this product should completely read through the guide that shipped with the product, as well as this manual, before installing, operating, or maintaining this product.

Disclaimer

Chauvet believes that the information contained in this manual is accurate in all respects. However, Chauvet assumes no responsibility and specifically disclaims any and all liability to any party for any loss, damage or disruption caused by any errors or omissions in this document, whether such errors or omissions result from negligence, accident or any other cause. Chauvet reserves the right to revise the content of this document without any obligation to notify any person or company of such revision, however, Chauvet has no obligation to make, and does not commit to make, any such revisions.

Document Revision

The Maverick MK1 Hybrid User Manual Rev. 7 is the current edition of this manual. Go to www.chauvetprofessional.com for the latest version.

Table of Contents

1. Before You Begin 1
What Is Included 1
Claims 1
Manual Conventions 1
Symbols 1
Safety Notes 2
2. Introduction 3
Description 3
Features 3
Overview 3
Dimensions 4
3. Setup 5
AC Power 5
AC Plug 5
Fuse Replacement 5
Mounting 6
Orientation 6
Signal Connections 7
Art-Net™ Connection 7
sACN Connection 7
4. Operation 8
Touchscreen Control Panel 8
Control Panel Description 8
Menu Map 8
Operating Settings Configuration 12
Start Address 12
Network Setup 12
Personality 13
Settings 14
Test Mode 18
System Information 18
Offset Mode 19
DMX Values 21
Gobo Designs – Rotating and Static Wheels 27
Color Wheels 28
5. Firmware Update 29
6. Technical Information 32
Product Maintenance 32
7. Technical Specifications 33
Photometrics Chart 35
Photometrics Chart 36
Photometrics Chart 37
Returns 38
Contact Us 39

1. Before You Begin

What Is Included

- Maverick MK1 Hybrid
- Seetronic Powerkon power cord
- 2 Omega brackets with mounting hardware
- Warranty card
- Quick Reference Guide

Claims

Carefully unpack the product immediately and check the box to make sure all the parts are in the package and are in good condition.
If the box or the contents (the product and included accessories) appear damaged from shipping or show signs of mishandling, notify the carrier immediately, not Chauvet. Failure to report damage to the carrier immediately may invalidate your claim. In addition, keep the box and contents for inspection.
For other issues, such as missing components or parts, damage not related to shipping, or concealed damage, file a claim with Chauvet within 7 days of delivery.

Manual Conventions

Convention	Meaning
1–512	A range of values in the text
50/60	A set of mutually exclusive values in the text
<SET>	A button on the product's control panel
Settings	A product function or a menu option
ON	A unique value to be entered or selected in a menu

Symbols

Symbols	Meaning
⚠	Critical installation, configuration, or operation information. Failure to comply with this information may cause the product not to work, damage third-party equipment, or cause harm to the operator.
ⓘ	Important installation or configuration information. Failure to comply with this information may keep the product from working.
	Useful information.

The term "DMX" used throughout this manual refers to the USITT DMX512-A digital data transmission protocol.

Safety Notes

Read all the following Safety Notes before working with this product. These notes include important information about the installation, usage, and maintenance of this product.

This product contains no user-serviceable parts. Any reference to servicing in this User Manual will only apply to properly trained Chauvet certified technicians. Do not open the housing or attempt any repairs.

All applicable local codes and regulations apply to proper installation of this product.

Personal Safety

- Avoid direct eye exposure to the light source while the product is on.
- Always disconnect this product from its power source before servicing.
- Always connect this product to a grounded circuit to avoid the risk of electrocution.
- Do not touch this product's housing during operation because it may be very hot.

Mounting And Rigging

- This product is not intended for permanent installation.
- This product is for indoor use only! To prevent risk of fire or shock, do not expose this product to rain or moisture. (IP20)
- CAUTION: When transferring product from extreme temperature environments, (e.g., cold truck to warm humid ballroom) condensation may form on the internal electronics of the product. To avoid causing a failure, allow product to fully acclimate to the surrounding environment before connecting it to power.
- Mount this product in a location with adequate ventilation, at least 20 in (50 cm) from adjacent surfaces.
- Make sure there are no flammable materials close to this product while it is operating.
- When hanging this product, always secure to a fastening device using a safety cable.
- Never carry the product by the power cord or any moving part.

Power And Wiring

- Make sure the power cord is not crimped or damaged.
- Always make sure you are connecting this product to the proper voltage in accordance with the specifications in this manual or on the product's specification label.
- To eliminate unnecessary wear and improve its lifespan, during periods of non-use completely disconnect the product from power via breaker or by unplugging it.
- Never connect this product to a dimmer pack or rheostat.
- Make sure to replace the fuse with another of the same type and rating.
- Never disconnect this product by pulling or tugging on the power cable.

Operation

- Do not operate this product if you see damage on the housing, lenses, or cables. Have the damaged parts replaced by an authorized technician at once.
- Do not cover the ventilation slots when operating to avoid internal overheating.
- The maximum ambient temperature is 113 °F (45 °C). Do not operate this product at a higher temperature.
- In case of a serious operating problem, stop using this product immediately!

If your Chauvet product requires service, contact Chauvet Technical Support.

2. INTRODUCTION

Description Maverick MK1 Hybrid puts a world of options at your fingertips with advanced optics, overlapping 8 and 4-facet prisms, a versatile gobo package, a 3º – 18º zoom range in spot mode and 19º – 41º in wash mode, and a robust CMY color system. Powered by a 440 W Osram Sirius reflector lamp, this supercharged hybrid awaits your command to dazzle with stunning output and effects. Choose from DMX, sACN, Art-Net, or W-DMX for control.

Features

- Fully featured, high powered Spot/Beam combination fixture with CMY color mixing and overlapping prisms
- Fast and precise movement of Pan and Tilt functions
- Variable CMY color mixing and static colors to create a wide range of color options
- Individually controllable and overlappable 8 and 4-facet prisms
- Frost and beam flattening options for even light distribution
- Zoom angle of 3° to 18° in spot mode and 19° to 41°in wash mode for multiple coverage options
- Tight 1° beam for extremely focused areal effects
- 6 rotating and 18 static gobos for massive visual impact
- DMX , WDMX, sACN, and Art-Net for full flexibility of control options
- True 1 compatible power input
- Battery backup touchscreen display with auto rotate depending on fixture orientation

Overview

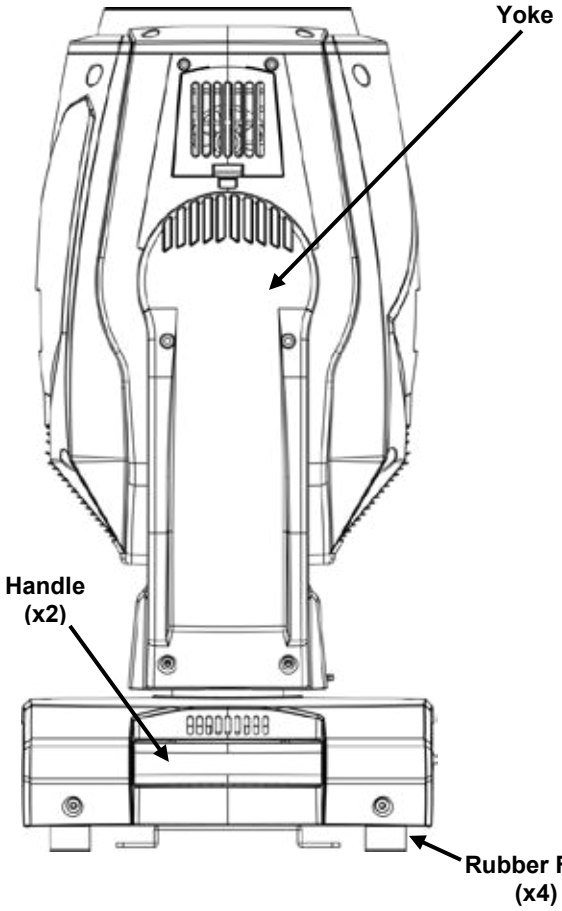

Front View

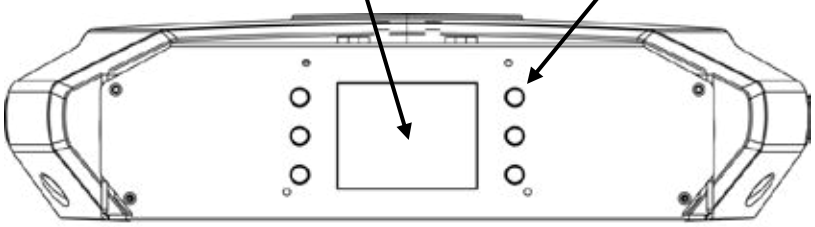

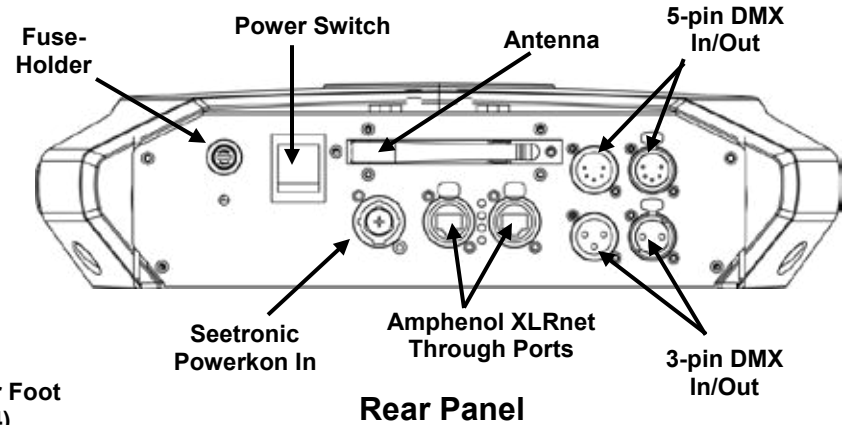

Rear Panel

Dimensions

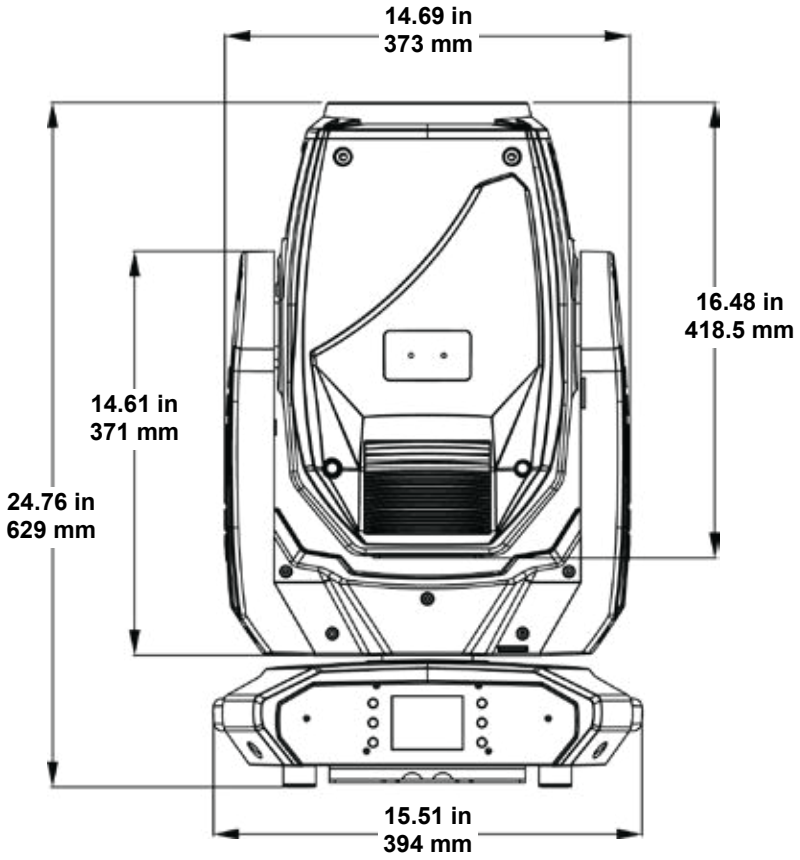
14.69 in
373 mm
16.48 in
418.5 mm
14.61 in
371 mm
24.76 in
629 mm
15.51 in
394 mm

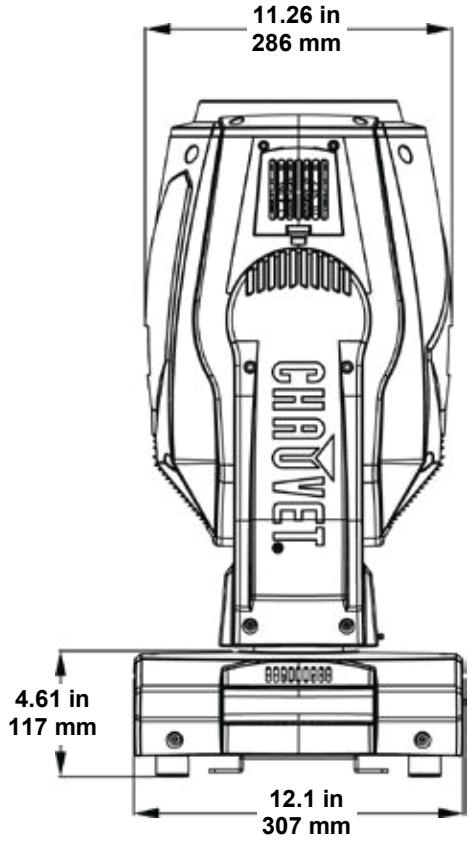
11.26 in
286 mm
4.61 in
117 mm
12.1 in
307 mm

3. SETUP

AC Power

Each Maverick MK1 Hybrid has an auto-ranging power supply that works with an input voltage range of 100 to 240 VAC, 50/60 Hz. To determine the power requirements for each Maverick MK1 Hybrid, refer to the label affixed to the product. You can also refer to the Technical Specifications chart in this manual.
The listed current rating indicates the maximum current draw during normal operation. For more information, you may download Sizing Circuit Breakers from the Chauvet website: www.chauvetprofessional.com.

- **Always connect this product to a protected circuit with an appropriate electrical ground to avoid the risk of electrocution or fire.**
- **Never connect this product to a rheostat (variable resistor) or dimmer circuit, even if the rheostat or dimmer channel serves only as a 0 to 100% switch.**
- **To eliminate unnecessary wear and improve its lifespan, during periods of non-use completely disconnect the product from power via breaker or by unplugging it.**

AC Plug

The Maverick MK1 Hybrid comes with a power input cord terminated with a Seetronic Powerkon connector on one end and an Edison plug on the other end (U.S. market). If the power input cord that came with your product has no plug, or if you need to change the Edison plug, use the table below to wire the new plug.

Connection	Wire (U.S.)	Wire (Europe)	Screw Color
AC Live	Black	Brown	Yellow or Brass
AC Neutral	White	Blue	Silver
AC Ground	Green/Yellow	Green/Yellow	Green

Fuse Replacement

1. Disconnect this product from the power outlet.
2. Using a flat-head screwdriver, unscrew the fuse holder cap from the housing.
3. Remove the blown fuse and replace with another fuse of the same type and rating (F 10 A, 250 V).
4. Screw the fuse holder cap back in place and reconnect power.

Make sure to disconnect the product's power cord before replacing a blown fuse. Always replace the blown fuse with another of the same type and rating.

Mounting

Before mounting this product, read and follow the Safety Notes. For our CHAUVET Professional line of mounting clamps, go to http://trusst.com/products/.

Orientation

Always mount this product in a safe position and make sure there is adequate room for ventilation, configuration, and maintenance. The Maverick MK1 Hybrid should be suspended upright or upside down using the 2 Omega brackets included, or it can be placed on its rubber feet on a flat level surface.

Chauvet recommends using the following general guidelines when mounting this product:

- When selecting an installation location, consider easy access to this product for operation, programming adjustments, and routine maintenance.
- The product is not intended for permanent installation.
- Make sure to mount this product away from any flammable material as indicated in the Safety Notes.
- Never mount in places where rain, high humidity, extreme temperature changes, or restricted ventilation may affect the product.
- If hanging this product, make sure that the mounting location can support the product's weight. See the Technical Specifications for the weight-bearing requirements of this product.
- When hanging this product, always secure to a fastening device using a safety cable. For our CHAUVET Professional line of safety cables, go to http://trusst.com/products/.
- When mounting the product on the floor, make sure that the product and cables are away from people and vehicles.
- Place the Maverick MK1 Hybrid so that it can move freely without hitting anything or anybody. Leave enough slack on the cabled to prevent tension and pulling on the plugs.

⚠ **DO NOT side mount this fixture.**

Mounting Diagram

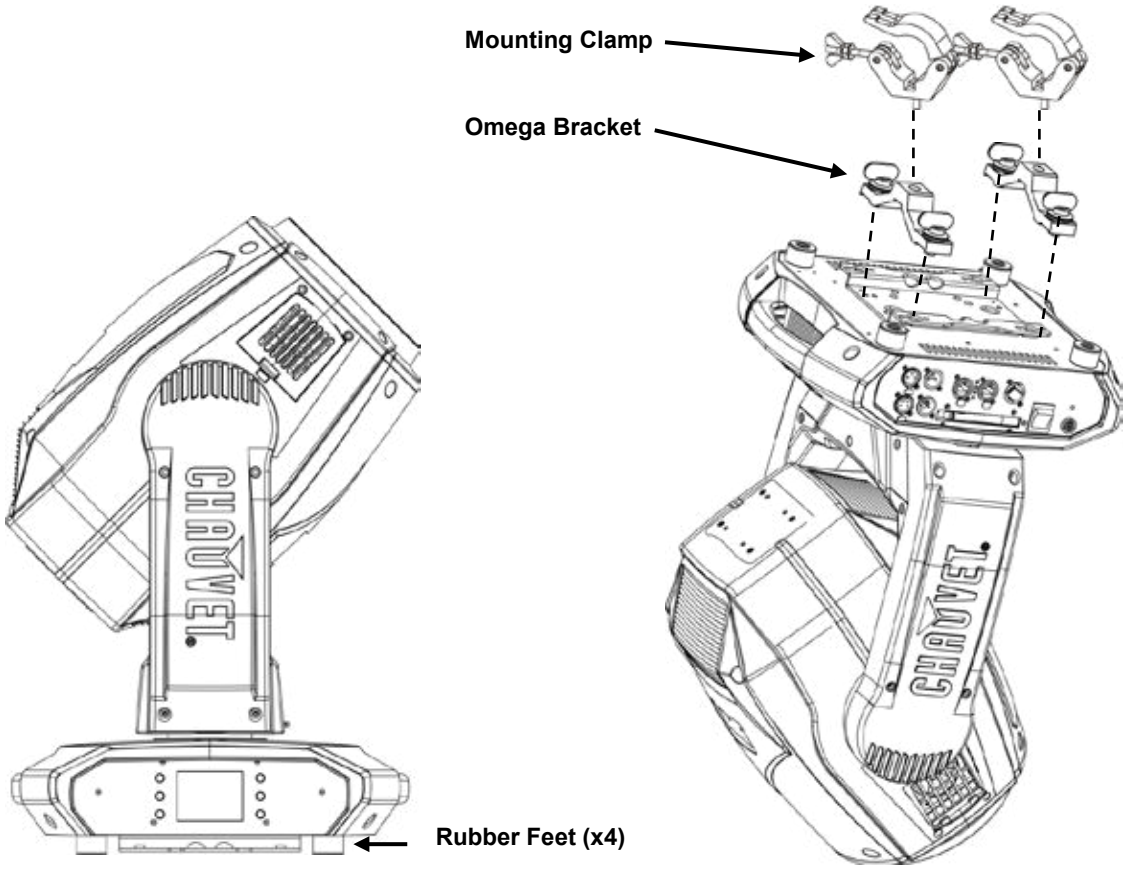

Floor Mounting **Overhead Mounting**

Signal Connections

The Maverick MK1 Hybrid can receive DMX, WDMX, Art-Net™, or sACN signal. The Maverick MK1 Hybrid has 2 Neutrik® etherCON® through ports, and 3- and 5-pin DMX in and out ports. For more information about DMX, read the DMX primer at:
http://www.chauvetlighting.com/downloads/DMX_Primer_Rev9_ML_WO.pdf

Art-Net™ Connection

Art-Net™ is an Ethernet protocol that uses TCP/IP which transfers a large amount of DMX512 data using an Neutrik® etherCON® RJ45 connection over a large network. An Art-Net™ protocol document is available from www.chauvetprofessional.com.
Art-Net™ designed by and copyright Artistic Licence Holdings Ltd.

sACN Connection

Also known as ANSI E1.31, streaming ACN is an Ethernet protocol that uses the layering and formatting of Architecture for Control Networks to transport DMX512 data over IP or any other ACN compatible network. ACN is maintained by the Professional Lighting and Sound Association (PLASA).

Connection Diagram

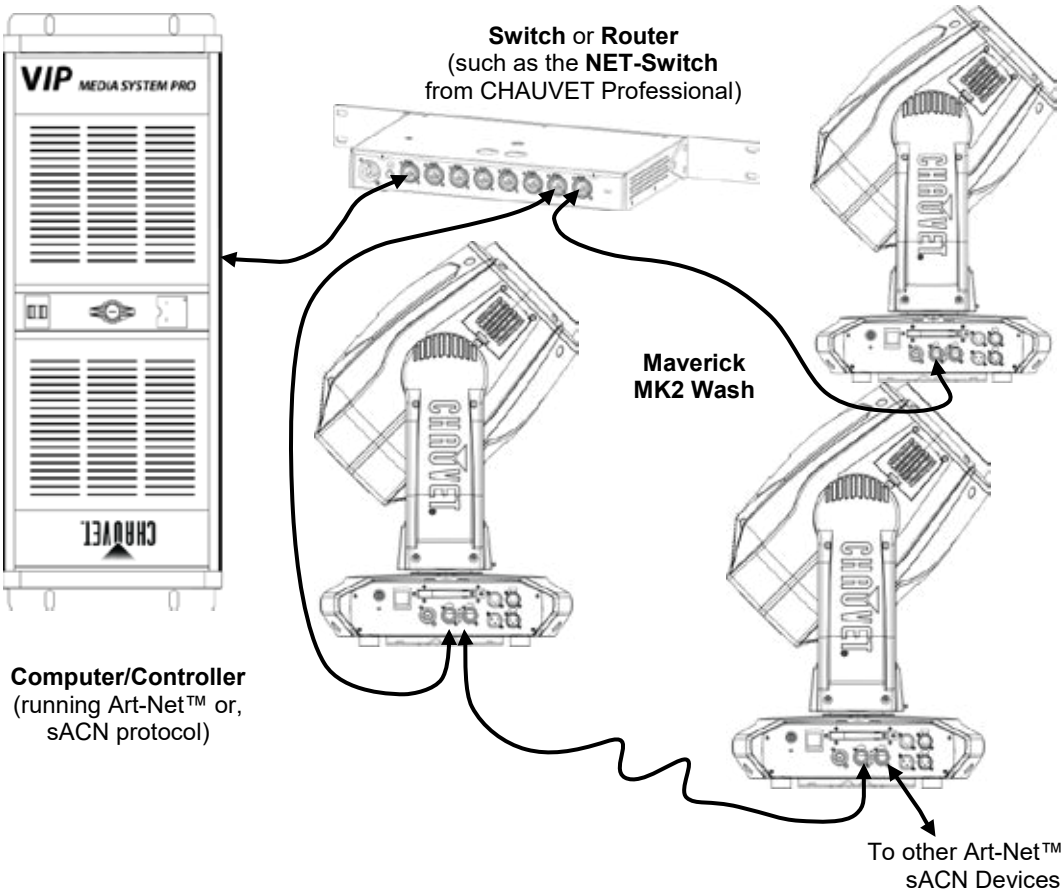

The three LED indicators in between the Amphenol XLRnet ports indicate a connection to a network and activity on that network. They do not indicate whether or not the Maverick MK1 Hybrid is receiving a signal from a controller.

4. OPERATION

Touchscreen Control Panel

The Maverick MK1 Hybrid has a touchscreen display as well as 6 control buttons. Navigate the menu structure by pressing the buttons, touching the images of the buttons on the sides of the display, or touching the desired menu option on the display directly. The touchscreen can be locked and calibrated through the **Setup** options in the menu. (see Touchscreen Calibration and Touchscreen Lock)

Control Panel Description

Button	Function
⇧	Navigates upwards through the menu list or increases the numeric value when in a function
☰	Exits from the current menu or function
⇩	Navigates downwards through the menu list or decreases the numeric value when in a function
⇦	Navigates leftwards through the menu list
↵	Enables the currently displayed menu or sets the currently selected value into the selected function
⇨	Navigates rightwards through the menu list

Battery Powered Display

Press and hold until menu screen appears (approx 15 sec.).

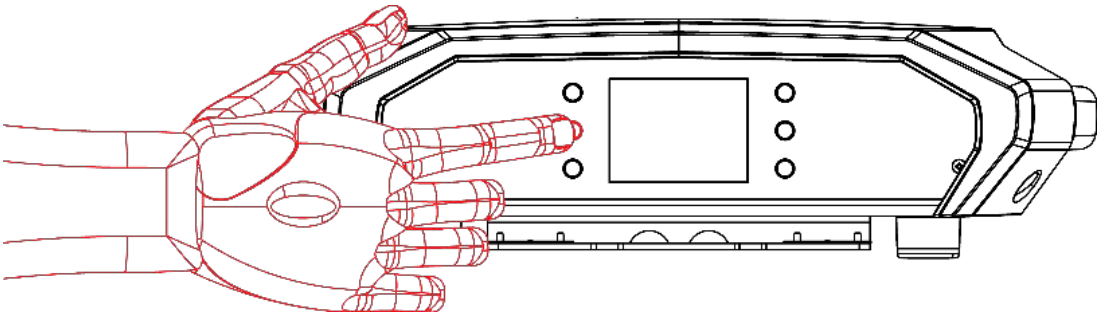

Menu Map

Main Level	Programming Levels		Description
Address	**000-512**		Network Settings
Art-Net Setup	**IP Mode**	**Manual**	Selection of IP mode
		DHCP	
		Static	
	Universe	**0 ~ 255**	Set the Universe
	ArtNetIP	**002.243.075.222**	IP setting
	SubMask	**255.000.000.000**	Subnet Mask
Personality	**DMX 27CH**	**YES**	Choose 27 channels of DMX
		NO	
	DMX 30CH	**YES**	Choose 30 channels of DMX
		NO	
Settings	**Control Mode**	**DMX**	Signal Selection
		WDMX	
		ArtNet	
		sACN	
	Pan Reverse	**YES**	Reverse the Pan
		NO	
	Tilt Reverse	**YES**	Reverse the tilt
		NO	

Main Level	Programming Levels			Description
Settings	Screen Reverse	NO		Manually or automatically reverse the screen
		YES		
		AUTO		
	Pan Angle	540		Change the Pan angle
		360		
		180		
	Tilt Angle	270		Change the tilt angle
		180		
		90		
	BL. O. P/T Move	YES		Enable/disable XY blackout
		NO		
	BL. O. Color Move	YES		Enable/disable color blackout
		NO		
	BL. O. Gobo Move	YES		Enable/disable gobo blackout
		NO		
	Calibration	YES		Turn on calibration
		NO		
	Touchscreen Lock	YES		Lock the touchscreen
		NO		
	Swap X/Y	YES		Swap the pan and tilt
		NO		
	X/Y Mode	Fast		Pan and tilt speed
		Slow		
	WDMX Reset	YES		Reset the wireless DMX
		NO		
	Backlight Timer	30S		Set the backlight to turn off automatically after a chosen time
		1M		
		5M		
		ON		
	Loss of Data	HOLD		Loss of data settings
		CLOSE		
	Safety Beam	OFF		Safety Beam mode
		ON		
	Lamp Setting	On/Off	OFF	Lamp on or off
			ON	
		State/ Power On	OFF	Lamp status shown when lamp is on
			ON	
		Off via DMX	NO	Control the lamp with DMX
			YES	
		On if DMX On	NO	Lamp On when DMX is on
			YES	
		Off if DMX Off	NO	Lamp off when DMX is off
			YES	

Main Level	Programming Levels			Description
Settings	Lamp Setting	Ignition Delay	10 ~ 255	set delay time for lamp ignition
		Low Power Delay	0 ~ 255	low power delay time
		Reset Lamp Time	NO	Reset the remaining lamp time
			YES	
	Special Set	Interval	10 ~ 250	Lamp maintenance reminder set
		Remain Time		Remaining lamp time
	Preset Select	PRESET A		Recorded preset menu options
		PRESET B		
		PRESET C		
	Preset Sync	NO		Allows recorded preset menu options to be transferred to other Maverick MK1 Hybrids in the DMX daisy chain
		YES		
	Reset Function	Pan/Tilt	Yes/No	Reset individual functions to factory
		Head		
		All		
	Factory Settings	NO		Reset all functions to factory
		YES		
Test	Auto Test			Auto Test the product
	Manual Test	Pan	0 ~ 255	Individually test each function/channel
		Pan Fine		
		Tilt		
		Fine Tilt		
		P/T Speed		
		Cyan		
		Magenta		
		Yellow		
		Color1		
		Color2		
		Color3		
		Shutter		
		Dimmer		
		Dimmer Fine		
		Gobo		
		Animation		
		Animation Rotate		
		Gobo		
		Gobo Rotate		
		Gobo Rotate Fine		
		Prism		
		Prism1 Rotate		
		Prism2 Rotate		
		Frost		
		Zoom		
		Focus		
		Fine Focus		
		Beam Mode		
		Special Function		

Main Level	Programming Levels			Description
Information	Fixture Information	Ver V1		Current version
		Running Mode DMX		Current mode
		DMX Address 001		DMX Address
		Temperature 025		Current temperature
		Fixture Hours 00000		Current active hours
		ArtNetIp 002.243.075.222		Current IP address
		SubMask 255.000.000.000		Current Subnet Mask
		MAC 00.04.a3.08.00.00		MAC address
	Fan Information	Base Fan1 Speed 2000rpm		View speed setting
		Base Fan2 Speed 2000rpm		View speed setting
		Head Fan1 Speed 2000rpm		View speed setting
		Head Fan2 Speed 2000rpm		View speed setting
	Error Information	_ _ _ _ _		Will appear on screen
	Channel Information	Frequency	0Hz	Status of individual channel
		Pan	0 ~ 255	
		Pan Fine		
		Tilt		
		Fine Tilt		
		P/T Speed		
		Cyan		
		Magenta		
		Yellow		
		Color1		
		Color2		
		Color3		
		Shutter		
		Dimmer		
		Dimmer Fine		
		Gobo		
		Animation		
		Animation Rotate		
		Gobo		
		Gobo Rotate		
		Gobo Rotate Fine		
		Prism		
		Prism1 Rotate		
		Prism2 Rotate		
		Frost		
		Zoom		
		Focus		
		Fine Focus		
		Beam Mode		
		Special Function		

Operating Settings Configuration

Home Screen The Maverick MK1 Hybrid has a home screen that shows the protocol mode, the IP address or DMX address, the DMX personality, and the current product temperature. To see the home screen, press **<MENU>** repeatedly until it appears on the display.

Start Address To set the starting address, set the Control Mode and then follow the instructions below:

1. Press **<MENU>** repeatedly until the Home Screen shows on the display. Press **<ENTER>**.
2. Use **<UP>**, **<DOWN>**, **<LEFT>**, or **<RIGHT>** to select **Address**, or touch the display where it says **Address**.
3. If using the buttons instead of the touchscreen, press **<ENTER>**.
4. Enter the starting address (**001–512**) with one of the following methods:
   - Type the address number using the number pad that shows on the touchscreen display.
     or
   - Using the buttons (or the button icons on the sides of the display),
     a. Use **<LEFT>** or **<RIGHT>** to select the digit to be altered.
     b. Use **<UP>** or **<DOWN>** to increase or decrease the number value of that digit.
     c. Repeat until the address is set as desired.
5. Press **<ENTER>**.

Network Setup

The universe of the TCP/IP protocol will be the universe of the DMX function.

IP Mode The IP address of the Maverick MK1 Hybrid can be set manually, by the network, or to a pre-set static address specific to each product. To set the IP Mode, follow the instructions below:

1. Press **<MENU>** repeatedly until the Home Screen shows on the display. Press **<ENTER>**.
2. Use **<UP>**, **<DOWN>**, **<LEFT>**, or **<RIGHT>** to select **Art-Net Setup**, or touch the display where it says **Network Setup**.
3. If using the buttons instead of the touchscreen, press **<ENTER>**.
4. Use **<UP>** or **<DOWN>** to select **IP Mode**, or touch the display where it says **IP Mode**.
5. If using the buttons instead of the touchscreen, press **<ENTER>**.
6. Use **<UP>**, **<DOWN>**, **<LEFT>**, or **<RIGHT>** to select from:
   - **Manual** (set the IP address with the control panel),
   - **DHCP** (the network sets the IP address),
     or
   - **Static** (a pre-set address specific to each product),

   or touch the display where it says the desired mode.
7. Press **<ENTER>**.

Subnet and Universe The Subnet and universe must be assigned through the product menu. To set the Subnet and Universe do the following:

1. Press **<MENU>** repeatedly until the Home Screen shows on the display. Press **<ENTER>**.
2. Use **<UP>**, **<DOWN>**, **<LEFT>**, or **<RIGHT>** to select **Art-Net Setup**, or touch the display where it says **Art-Net Setup**.
3. If using the buttons instead of the touchscreen, press **<ENTER>**.
4. Use **<UP>** or **<DOWN>** to select **Universe**, or touch the display where it says **Universe**.
5. If using the buttons instead of the touchscreen, press **<ENTER>**.
6. Enter the universe address (**0–254** for **ArtNet**, **0–255** for **sACN**) with one of the following methods:
   - Type the universe number using the number pad that shows on the touchscreen display.
     or
   - Using the buttons (or the button icons on the sides of the display),
     a. Use **<LEFT>** or **<RIGHT>** to select the digit to be altered.
     b. Use **<UP>** or **<DOWN>** to increase or decrease the number value of that digit.
     c. Repeat until the universe or subnet is set as desired.
7. Press **<ENTER>**.

ArtNet IP Address To set the IP address, do the following:

1. Press **<MENU>** repeatedly until the Home Screen shows on the display. Press **<ENTER>**.
2. Use **<UP>**, **<DOWN>**, **<LEFT>**, or **<RIGHT>** to select **Art-Net Setup**, or touch the display where it says **Art-Net Setup**.
3. If using the buttons instead of the touchscreen, press **<ENTER>**.
4. Use **<UP>** or **<DOWN>** to select **ArtNetIP**, or touch the display where it says **ArtNetIP**.
5. If using the buttons instead of the touchscreen, press **<ENTER>**.
6. Set the IP address (from **000.000.000.000** to **255.255.255.255**) with one of the following methods:
   - Through the touchscreen:
     a. Touch the display where it shows the byte (set of three numbers) to be changed.
     b. Use the number pad on the display to enter the desired number.
     c. Repeat until the IP address is set as desired.
   - With the buttons:
     a. Use **<LEFT>** or **<RIGHT>** to select the byte (set of three numbers) to be changed).
     b. Use **<UP>** or **<DOWN>** to increase or decrease the value.
     c. Repeat until the IP address is set as desired.
7. Press **<ENTER>**.

Subnet Mask To set the Subnet Mask, do the following:

1. Press **<MENU>** repeatedly until the Home Screen shows on the display. Press **<ENTER>**.
2. Use **<UP>**, **<DOWN>**, **<LEFT>**, or **<RIGHT>** to select **Art-Net Setup**, or touch the display where it says **Art-Net Setup**.
3. If using the buttons instead of the touchscreen, press **<ENTER>**.
4. Use **<UP>** or **<DOWN>** to select **SubMask**, or touch the display where it says **SubMask**.
5. If using the buttons instead of the touchscreen, press **<ENTER>**.
6. Set the Subnet Mask (from **000.000.000.000** to **255.255.255.255**) with one of the following methods.
   - Through the touchscreen:
     a. Touch the display where it shows the byte (set of three numbers) to be changed.
     b. Use the number pad on the display to enter the desired number.
     c. Repeat until the Subnet Mask is set as desired.
   - With the buttons:
     a. Use **<LEFT>** or **<RIGHT>** to select the byte (set of three numbers) to be changed).
     b. Use **<UP>** or **<DOWN>** to increase or decrease the value.
     c. Repeat until the Subnet Mask is set as desired.
7. Press **<ENTER>**.

In DHCP or Static IP Mode, the IP and SubMask menu settings have no effect on the product.

Personality

To set which DMX personality to use, do the following:

1. Press **<MENU>** repeatedly until the Home Screen shows on the display. Press **<ENTER>**.
2. Use **<UP>**, **<DOWN>**, **<LEFT>**, or **<RIGHT>** to select **Personality**, or touch the display where it says **Personality**.
3. If using the buttons instead of the touchscreen, press **<ENTER>**.
4. Use **<UP>**, **<DOWN>**, **<LEFT>**, or **<RIGHT>** to select **DMX 27CH** or **DMX 30CH**, or touch the display where it says the desired option.
5. If using the buttons instead of the touchscreen, press **<ENTER>**.
6. Use **<UP>**, **<DOWN>**, **<LEFT>**, or **<RIGHT>** to select **NO** (cancel) or **YES** (confirm) or touch the display where it says the desired option.
7. Press **<ENTER>**.

Settings

To reach the **Settings** menu, follow the instructions below:

1. Press **<MENU>** repeatedly until the Home Screen shows on the display. Press **<ENTER>**.
2. Use **<UP>**, **<DOWN>**, **<LEFT>**, or **<RIGHT>** to select **Settings**, or touch the display where it says **Settings**.
3. If using the buttons instead of the touchscreen, press **<ENTER>**.

Control Mode

The Maverick MK1 Hybrid can be set to respond to DMX, WDMX, Art-Net™ or sACN. The protocol configuration must be set for the product to respond correctly to the controller(s). See the Menu Map for more information.

To configure the protocol for the Maverick MK1 Hybrid, follow the instructions below:

1. Navigate to the **Settings** menu.
2. Use **<UP>** or **<DOWN>** to select **Control Mode**, or touch the display where it says **Control Mode**.
3. If using the buttons instead of the touchscreen, press **<ENTER>**.
4. Use **<UP>**, **<DOWN>**, **<LEFT>**, or **<RIGHT>** to select **DMX**, **WDMX**, **sACN**, **ArtNet**., or touch the display where it says the desired option.
5. Press **<ENTER>**.

For WDMX control, ensure the antenna is raised and there are no obstructions between the controller and the product. See WDMX Reset for troubleshooting information.

Pan/Tilt Orientation

To set whether the pan or tilt orientation is normal or inverted:"

1. Navigate to the **Settings** menu.
2. Use **<UP>** or **<DOWN>** to select **Pan Reverse** or **Tilt Reverse**, or touch the display where it says the desired setting.
3. If using the buttons instead of the touchscreen, press **<ENTER>**.
4. Use **<UP>**, **<DOWN>**, **<LEFT>**, or **<RIGHT>** to select **NO** (normal orientation) or **YES** (inverted orientation), or touch the display where it says the desired option.
5. Press **<ENTER>**.

Display Orientation

To set which way the display faces, do the following:

1. Navigate to the **Settings** menu.
2. Use **<UP>** or **<DOWN>** to select **Screen Reverse**, or touch the display where it says **Screen Reverse**.
3. If using the buttons instead of the touchscreen, press **<ENTER>**.
4. Use **<UP>**, **<DOWN>**, **<LEFT>**, or **<RIGHT>** to select **NO** (display is normal), **YES** (display is inverted), or **AUTO** (the display automatically detects which way the product is facing and orients itself accordingly), or touch the display where it says the desired option.
5. Press **<ENTER>**.

Pan/Tilt Angle Range

To set the range of motion the pan or tilt is permitted:

1. Navigate to the **Settings** menu.
2. Use **<UP>** or **<DOWN>** to select **Pan Angle** or **Tilt Angle**, or touch the display where it says the desired setting.
3. If using the buttons instead of the touchscreen, press **<ENTER>**.
4. Use **<UP>**, **<DOWN>**, **<LEFT>**, or **<RIGHT>** to select **540** (540°), **360** or **270** (360° or 270° for pan or tilt respectively), **180** (180°), or **90** (90°) or touch the display where it says the desired option.
5. Press **<ENTER>**.

Blackout on Pan/Tilt Movement

To set whether the product will black out during pan or tilt movement, follow the instructions below:

1. Navigate to the **Settings** menu.
2. Use **<UP>** or **<DOWN>** to select **BL. O. P/T Move**, or touch the display where it says **BL. O. P/T Move**.
3. If using the buttons instead of the touchscreen, press **<ENTER>**.
4. Use **<UP>**, **<DOWN>**, **<LEFT>**, or **<RIGHT>** to select **NO** (do not black out) or **YES** (black out during movement), or touch the display where it says the desired option.
5. Press **<ENTER>**.

Blackout on Color Movement

To set whether the product will black out during color movement, follow the instructions below:

1. Navigate to the **Settings** menu.
2. Use **<UP>** or **<DOWN>** to select **BL. O. Color Move**, or touch the display where it says **BL. O. Color Move**.
3. If using the buttons instead of the touchscreen, press **<ENTER>**.
4. Use **<UP>**, **<DOWN>**, **<LEFT>**, or **<RIGHT>** to select **NO** (do not black out) or **YES** (black out during movement), or touch the display where it says the desired option.
5. Press **<ENTER>**.

Blackout on Gobo Movement

To set whether the product will black out during gobo movement, follow the instructions below:

1. Navigate to the **Settings** menu.
2. Use **<UP>** or **<DOWN>** to select **BL. O. Gobo Move**, or touch the display where it says **BL. O. Gobo Move**.
3. If using the buttons instead of the touchscreen, press **<ENTER>**.
4. Use **<UP>**, **<DOWN>**, **<LEFT>**, or **<RIGHT>** to select **NO** (do not black out) or **YES** (black out during movement), or touch the display where it says the desired option.
5. Press **<ENTER>**.

Touchscreen Calibration

If the touchscreen is not responding correctly, it may need to be calibrated. To do so:

1. Navigate to the **Settings** menu.
2. Use **<UP>** or **<DOWN>** to select **Calibration**, or touch the display where it says **Calibration**.
3. If using the buttons instead of the touchscreen, press **<ENTER>**.
4. Use **<UP>**, **<DOWN>**, **<LEFT>**, or **<RIGHT>** to select **NO** (do not calibrate) or **YES** (calibrate), or touch the display where it says the desired option.
5. Press **<ENTER>**.
6. Follow the instructions, touching the points as they appear on the display.

Touchscreen Lock

To lock or unlock the touchscreen control panel, do the following:

1. Navigate to the **Settings** menu.
2. Use **<UP>** or **<DOWN>** to select **Touchscreen Lock**, or touch the display where it says **Touchscreen Lock**.
3. If using the buttons instead of the touchscreen, press **<ENTER>**.
4. Use **<UP>**, **<DOWN>**, **<LEFT>**, or **<RIGHT>** to select **NO** (display will respond to touch) or **YES** (display will not respond to touch), or touch the display on the desired option.
5. Press **<ENTER>**.

Lock the Screen

To lock the touchscreen control panel and menu buttons, do the following:

1. Navigate to the **Settings** menu.
2. Use **<UP>** or **<DOWN>** to select **Lock Screen**, or touch the display where it says **Lock Screen**.
3. If using the buttons instead of the touchscreen, press **<ENTER>**.
4. Use **<UP>**, **<DOWN>**, **<LEFT>**, or **<RIGHT>** to select **NO** (display will respond to touch or buttons) or **YES** (display will not respond to touch or buttons), or touch the display where it says the desired option.
   Press **<ENTER>**.

To unlock the touchscreen and menu buttons, do the following:

5. Touch the display touchscreen anywhere or push any menu button.
6. Enter the passcode (**0920**) using the touchscreen or buttons.

Swap Pan and Tilt

To switch the pan and tilt functions so that what normally controls the pan controls the tilt and what normally controls the tilt controls the pan, follow the instructions below:

1. Navigate to the **Settings** menu.
2. Use **<UP>** or **<DOWN>** to select **Swap XY**, or touch the display where it says **Swap XY**.
3. If using the buttons instead of the touchscreen, press **<ENTER>**.
4. Use **<UP>**, **<DOWN>**, **<LEFT>**, or **<RIGHT>** to select **NO** (normal pan and tilt) or **YES** (pan controls tilt, tilt controls pan), or touch the display where it says the desired option.
5. Press **<ENTER>**.

Pan/Tilt Speed To set the maximum speed of the pan and tilt:

1. Navigate to the **Settings** menu.
2. Use **<UP>** or **<DOWN>** to select **XY Mode**, or touch the display where it says **XY Mode**.
3. If using the buttons instead of the touchscreen, press **<ENTER>**.
4. Use **<UP>**, **<DOWN>**, **<LEFT>**, or **<RIGHT>** to select **Slow** or **Fast**, or touch the display where it says the desired option.
5. Press **<ENTER>**.

WDMX Reset To reset the WDMX connection from the Maverick MK1 Hybrid, do the following:

1. Navigate to the **Settings** menu.
2. Use **<UP>** or **<DOWN>** to select **WDMX Reset**, or touch the display where it says **WDMX Reset**.
3. If using the buttons instead of the touchscreen, press **<ENTER>**.
4. Use **<UP>**, **<DOWN>**, **<LEFT>**, or **<RIGHT>** to select **NO** (do not reset connection) or **YES** (reset the connection), or touch the display where it says the desired option.
5. Press **<ENTER>**.

Once a WDMX receiver has been linked to a specific WDMX transmitter, it will remain linked to that specific transmitter until it is linked to a different one.

Backlight Timer To set the amount of time after inactivity before the display backlight turns off:

1. Navigate to the **Settings** menu.
2. Use **<UP>** or **<DOWN>** to select **Backlight Timer**, or touch the display where it says **Backlight Timer**.
3. If using the buttons instead of the touchscreen, press **<ENTER>**.
4. Use **<UP>**, **<DOWN>**, **<LEFT>**, or **<RIGHT>** to select **30S** (after 30 seconds of inactivity), **1M** (after 1 minute of inactivity), **5M** (after 5 minutes of inactivity), or **30M** (after 30 minutes of inactivity), or touch the display where it says the desired option.
5. Press **<ENTER>**.

Loss of Data In case of an input signal being lost in any way, the Maverick MK1 Hybrid will respond in one of two ways. The product will either hold the last signal received, or black out all LED output.
To set which way the product responds, follow the instructions below:

1. Navigate to the **Settings** menu.
2. Use **<UP>** or **<DOWN>** to select **Loss of Data**, or touch the display where it says **Loss of Data**.
3. If using the buttons instead of the touchscreen, press **<ENTER>**.
4. Use **<UP>**, **<DOWN>**, **<LEFT>**, or **<RIGHT>** to select **Hold** (hold last signal received) or **Close** (black out all LED output), or touch the display where it says the desired option.
5. Press **<ENTER>**.

Dimmer Curve To set the dimmer curve, follow the instructions below:

1. Navigate to the **Settings** menu.
2. Use **<UP>** or **<DOWN>** to select **Dimmer Curve**, or touch the display where it says **Dimmer Curve**.
3. If using the buttons instead of the touchscreen, press **<ENTER>**.
4. Use **<UP>**, **<DOWN>**, **<LEFT>**, or **<RIGHT>** to select **Linear**, **Square**, **I Squa**, or **SCurve**, or touch the display where it says the desired option.
5. Press **<ENTER>**.

Dimmer Speed To set the dimmer speed, do the following:

1. Navigate to the **Settings** menu.
2. Use **<UP>** or **<DOWN>** to select **Dimmer Speed**, or touch the display where it says **Dimmer Speed**.
3. If using the buttons instead of the touchscreen, press **<ENTER>**.
4. Use **<UP>**, **<DOWN>**, **<LEFT>**, or **<RIGHT>** to select **Smooth** or **Fast**, or touch the display where it says the desired option.
5. Press **<ENTER>**.

Preset Select This option saves 3 different preset menu option configurations. To record and set these presets follow the instructions below:

1. Navigate to the **Settings** menu.
2. Use **<UP>** or **<DOWN>** to select **Preset Select**, or touch the display where it says **Preset Select**.
3. If using the buttons instead of the touchscreen, press **<ENTER>**.
4. Use **<UP>**, **<DOWN>**, **<LEFT>**, or **<RIGHT>** to select **PRESET A, PRESET B** or **PRESET C**, or touch the display where it says the desired option.
5. Press **<ENTER>.**
6. The product will reset. Any changes made to the menu options will be saved to this preset.

- **Default is PRESET A. If you make changes inside PRESET A, those changes are saved to PRESET A without having to do anything.**
- **To create a new preset, highlight and select PRESET SELECT. Highlight PRESET B or PRESET C and press <ENTER>. When you make that selection, the product will reset automatically. Go back and make the changes you need to make in the menu. This will automatically save to the preset you are in.**

Preset Sync To sync all menu presets to other Maverick MK1 Hybrids, follow the instructions below:

1. Connect all Maverick MK1 Hybrid via DMX cable.
2. Navigate to the **Settings** menu.
3. Use **<UP>** or **<DOWN>** to select **Preset Sync**, or touch the display where it says **Preset Sync**
4. If using the buttons instead of the touchscreen, press **< ENTER >**.
5. Select **YES** or touch the display where it says the desired option.
6. Press **< ENTER >.**

- **To sync other Maverick MK1 Hybrids, you connect those products by a DMX cable.**
- **The product can be in any control mode except WDMX. ArtNet, DMX, sACN are all acceptable.**
- **All menu options are transferred, including the DMX address. Only the IP address in not affected in the other products.**

Reset Functions To reset the pan, tilt, or all functions as if from startup:

1. Navigate to the **Settings** menu.
2. Use **<UP>** or **<DOWN>** to select **Reset Function**, or touch the display where it says **Reset Function**.
3. If using the buttons instead of the touchscreen, press **<ENTER>**.
4. Use **<UP>** or **<DOWN>** to select the function to reset, from **Pan/Tilt**, **Iris/Prism**, **Color/CMY+CTO**, **Gobo/Gobo Rotate**, **Zoom/Frost/Focus** or **All**, or touch the display where it says the desired option.
5. If using the buttons instead of the touchscreen, press **<ENTER>**.

6. Use **<UP>**, **<DOWN>**, **<LEFT>**, or **<RIGHT>** to select from **NO** (do not reset) or **YES** (reset), or touch the display where it says the desired option.
7. Press **<ENTER>**.

Factory Reset To restore the Maverick MK1 Hybrid to factory default settings, do the following:

1. Navigate to the **Settings** menu.
2. Use **<UP>** or **<DOWN>** to select **Factory Settings**, or touch the display where it says **Factory Settings**.
3. If using the buttons instead of the touchscreen, press **<ENTER>**.
4. Use **<UP>**, **<DOWN>**, **<LEFT>**, or **<RIGHT>** to select **NO** (do not reset) or **YES** (reset to factory settings), or touch the display where it says the desired option.
5. Press **<ENTER>**.

Test Mode

Auto Test To perform an auto test of the Maverick MK1 Hybrid functions, follow the instructions below:

1. Press **<MENU>** repeatedly until the Home Screen shows on the display. Press **<ENTER>**.
2. Use **<UP>**, **<DOWN>**, **<LEFT>**, or **<RIGHT>** to select **Test**, or touch the display where it says **Test**.
3. If using the buttons instead of the touchscreen, press **<ENTER>**.
4. Use **<UP>** or **<DOWN>** to select **Auto test**, or touch the display where it says **Auto test**.
5. Press **<ENTER>**.

Manual Test To test the functions of the product manually, do the following:

1. Press **<MENU>** repeatedly until the Home Screen shows on the display. Press **<ENTER>**.
2. Use **<UP>**, **<DOWN>**, **<LEFT>**, or **<RIGHT>** to select **Test**, or touch the display where it says **Test**.
3. If using the buttons instead of the touchscreen, press **<ENTER>**.
4. Use **<UP>** or **<DOWN>** to select **Manual test**, or touch the display where it says **Manual test**.
5. If using the buttons instead of the touchscreen, press **<ENTER>**.
6. Use **<UP>** or **<DOWN>** to select the function to test, from **Pan**, **Pan Fine, Tilt**, **Tilt Fine**, **P/S Speed**, **Dimmer**, **Dimmer Fine**, **Shutter**, **Virtual Shaking**, **Cyan**, **Magenta**, **Yellow**, **CTO**, **Color, Gobo, Gobo Rotate**, **Gobo 2**, **Gobo 2 Rotate**, **Focus**, **Focus Fine**, **Focus Auto**, **Zoom**, **Zoom Fine**, **Prism**, **Prism Rotate**, **Iris**, **Frost**, **CMY Macro**, **CMY Macro Speed**, or **Special Function**, or touch the display where it says the desired function.
7. If using the buttons instead of the touchscreen, press **<ENTER>**.
8. Change the value of the tested function with one of the following methods:
   - Type the desired value using the number pad that shows on the touchscreen display.
     or
   - Use **<UP>**, **<RIGHT>**, **<DOWN>**, or **<LEFT>** to increase or decrease the value.
9. Press **<ENTER>**.

System Information

All information about the current status of the Maverick MK1 Hybrid is available through the product's **Sys Info** menu. To view this information, follow the instructions below:

1. Press **<MENU>** repeatedly until the Home Screen shows on the display. Press **<ENTER>**.
2. Use **<UP>**, **<DOWN>**, **<LEFT>**, or **<RIGHT>** to select **Information**, or touch the display where it says **Information**.
3. If using the buttons instead of the touchscreen, press **<ENTER>**.
4. Use **<UP>** or **<DOWN>** to select from **Fixture Information** (shows firmware version, running mode, starting address, etc.), **Fan Information** (shows speed of the head fans in rpm), **Error Information** (shows any errors or No Error!), or **Channel Information** (shows the current value of all signal input channels) or touch the display where it says the desired option.
5. Press **<ENTER>**.
6. Use **<UP>** or **<DOWN>** to scroll through the information.

Offset Mode

The Offset mode provides fine adjustments for the home position of all the moving parts in the optical path as well as the pan and tilt movements. This way, when in their home position, the moving parts do not show any border or reduce the light output.

1. Starting from the Main Level screen, press and hold **<MENU>** until the passcode screen appears.
2. Enter the passcode **2323** using one of the following methods:
   - Through the touchscreen: use the number pad on the screen to enter **2323**.
   - With the buttons:
     a. Use **<DOWN>** to select the number to be changed.
     b. Use **<UP>** to increase the value.
     c. Repeat until **2323** has been entered.
3. Press **<ENTER>**.

This brings you into the Zero Adjust menu screen.

PAN
1. Use **<UP>** or **<DOWN>** to select **PAN**.
2. Press **<ENTER>**.
3. Use **<UP>** or **<DOWN>** to increase or decrease the starting value, from **000–255**.
4. Press **<ENTER>**.

TILT
1. Use **<UP>** or **<DOWN>** to select **TILT**.
2. Press **<ENTER>**.
3. Use **<UP>** or **<DOWN>** to increase or decrease the starting value, from **000–255**.
4. Press **<ENTER>**.

COLOR
1. Use **<UP>** or **<DOWN>** to select **COLOR**.
2. Press **<ENTER>**.
3. Use **<UP>** or **<DOWN>** to increase or decrease the starting value, from **000–255**.
4. Press **<ENTER>**.

GOBO
1. Use **<UP>** or **<DOWN>** to select **GOBO**.
2. Press **<ENTER>**.
3. Use **<UP>** or **<DOWN>** to increase or decrease the starting value, from **000–255**.
4. Press **<ENTER>**.

GOBO ROTATE
1. Use **<UP>** or **<DOWN>** to select **GOBO ROTATE**.
2. Press **<ENTER>**.
3. Use **<UP>** or **<DOWN>** to increase or decrease the starting value, from **000–255**.
4. Press **<ENTER>**.

GOBO 2
1. Use **<UP>** or **<DOWN>** to select **GOBO 2**.
2. Press **<ENTER>**.
3. Use **<UP>** or **<DOWN>** to increase or decrease the starting value, from **000–255**.
4. Press **<ENTER>**.

GOBO 2 ROTATE
1. Use **<UP>** or **<DOWN>** to select **GOBO 2 ROTATE**.
2. Press **<ENTER>**.
3. Use **<UP>** or **<DOWN>** to increase or decrease the starting value, from **000–255**.
4. Press **<ENTER>**.

FOCUS 1
1. Use **<UP>** or **<DOWN>** to select **FOCUS 1**.
2. Press **<ENTER>**.
3. Use **<UP>** or **<DOWN>** to increase or decrease the starting value, from **000–255**.
4. Press **<ENTER>**.

FOCUS 2
1. Use **<UP>** or **<DOWN>** to select **FOCUS 2**.
2. Press **<ENTER>**.
3. Use **<UP>** or **<DOWN>** to increase or decrease the starting value, from **000–255**.
4. Press **<ENTER>**.

FOCUS GOBO 2
1. Use **<UP>** or **<DOWN>** to select **FOCUS GOBO 2**.
2. Press **<ENTER>**.
3. Use **<UP>** or **<DOWN>** to increase or decrease the starting value, from **000–255**.
4. Press **<ENTER>**.

ZOOM
1. Use **<UP>** or **<DOWN>** to select **ZOOM**.
2. Press **<ENTER>**.
3. Use **<UP>** or **<DOWN>** to increase or decrease the starting value, from **000–255**.
4. Press **<ENTER>**.

PRISM
1. Use **<UP>** or **<DOWN>** to select **PRISM**.
2. Press **<ENTER>**.
3. Use **<UP>** or **<DOWN>** to increase or decrease the starting value, from **000–255**.
4. Press **<ENTER>**.

IRIS
1. Use **<UP>** or **<DOWN>** to select **IRIS**.
2. Press **<ENTER>**.
3. Use **<UP>** or **<DOWN>** to increase or decrease the starting value, from **000–255**.
4. Press **<ENTER>**.

FROST
1. Use **<UP>** or **<DOWN>** to select **FROST**.
2. Press **<ENTER>**.
3. Use **<UP>** or **<DOWN>** to increase or decrease the starting value, from **000–255**.
4. Press **<ENTER>**.

CYAN
1. Use **<UP>** or **<DOWN>** to select **CYAN**.
2. Press **<ENTER>**.
3. Use **<UP>** or **<DOWN>** to increase or decrease the starting value, from **000–255**.
4. Press **<ENTER>**.

MAGENTA
1. Use **<UP>** or **<DOWN>** to select **MAGENTA**.
2. Press **<ENTER>**.
3. Use **<UP>** or **<DOWN>** to increase or decrease the starting value, from **000–255**.
4. Press **<ENTER>**.

YELLOW
1. Use **<UP>** or **<DOWN>** to select **YELLOW**.
2. Press **<ENTER>**.
3. Use **<UP>** or **<DOWN>** to increase or decrease the starting value, from **000–255**.
4. Press **<ENTER>**.

CTO
1. Use **<UP>** or **<DOWN>** to select **CTO**.
2. Press **<ENTER>**.
3. Use **<UP>** or **<DOWN>** to increase or decrease the starting value, from **000–255**.
4. Press **<ENTER>**.

DIMMER
1. Use **<UP>** or **<DOWN>** to select **DIMMER**.
2. Press **<ENTER>**.
3. Use **<UP>** or **<DOWN>** to increase or decrease the starting value, from **000–255**.
4. Press **<ENTER>**.

LED POWER
1. Use **<UP>** or **<DOWN>** to select **LED POWER**.
2. Press **<ENTER>**.
3. Use **<UP>** or **<DOWN>** to increase or decrease the starting value, from **000–255**.
4. Press **<ENTER>**.

MAC4
1. Use **<UP>** or **<DOWN>** to select **MAC4**.
2. Press **<ENTER>**.
3. Use **<UP>** or **<DOWN>** to increase or decrease the starting value, from **000–255**.
4. Press **<ENTER>**.

MAC5
1. Use **<UP>** or **<DOWN>** to select **MAC5**.
2. Press **<ENTER>**.
3. Use **<UP>** or **<DOWN>** to increase or decrease the starting value, from **000–255**.
4. Press **<ENTER>**.

MAC6
1. Use **<UP>** or **<DOWN>** to select **MAC6**.
2. Press **<ENTER>**.
3. Use **<UP>** or **<DOWN>** to increase or decrease the starting value, from **000–255**.
4. Press **<ENTER>**.

DMX Values

30CH

Channel	Function	Value	Percent/Settings
1	**Pan**	000⇔255	0–100%
2	**Fine Pan**	000⇔255	0–100%
3	**Tilt**	000⇔255	0–100%
4	**Fine Tilt**	000⇔255	0–100%
5	**Pan/Tilt Speed**	000⇔255	0–100%
6	**Dimmer**	000⇔255	0–100%
7	**Fine Dimmer**	000⇔255	0–100%
8	**Shutter**	000⇔007 008⇔015 016⇔131 132⇔167 168⇔203 204⇔239 240⇔247 248⇔255	Closed Open Slow to fast Fast close, slow open Slow close, fast open Pulse effect from slow to fast Random effect from slow to fast Open
9	**Cyan**	000⇔255	0–100%
10	**Magenta**	000⇔255	0–100%
11	**Yellow**	000⇔255	0–100%
12	**Color Wheel 1**	000 028 050 080 100 129 150 181 200 235 255	Open White + Beam Softener Beam Softener Beam Softener + Lavender Lavender Lavender + CTO 3200K CTO 3200K CTO 3200K + (UV) (UV) (UV) + CTO 2500K CTO 2500K
13	**Color Wheel 2**	000 028 050 080 100 129 150 181 200 235 255	Open White + Beam Softener Beam Softener Beam Softener + Dark Green Dark Green Dark Green + Dark Red Dark Red Dark Red + Dark Blue Dark Blue Dark Blue + Minus Green Minus Green
14	**Color Wheel 3**	000 028 050 080 100 129 150 181 200 235 255	Open White + Beam Softener Beam Softener Beam Softener + Dark Orange Dark Orange Dark Orange + Light Orange Light Orange Light Orange + Light Green Light Green Light Green + Pink Pink

30CH

Channel	Function	Value	Percent/Settings
15	**Gobo Wheel 1 (Static)** [Gobo Designs]	000	Open
		004	Gobo 1 (Full Aperture)
		008	Gobo 2 (Aperture 1/3)
		012	Gobo 3 (Aperture 1/2)
		016	Gobo 4 (Aperture 2/3)
		019	Gobo 5 (Aperture 5/6)
		023	Gobo 6 (Triangle dots)
		027	Gobo 7 (Curvy triangle)
		031	Gobo 8 (Random dots)
		035	Gobo 9 (Symmetric dots)
		038	Gobo 10 (Line)
		042	Gobo 11 (Laser Circle)
		046	Gobo 12 (Square Lines)
		050	Gobo 13 (Brick Out)
		054	Gobo 14 (Triangle square)
		057	Gobo 15 (Shades)
		061	Gobo 16 (Crunch Bar)
		065	Gobo 17 (5 Wave)
		069	Gobo 18 (Burst)
		070⇔113	Clockwise gobo scroll, fast to slow
		114⇔117	stop
		118⇔159	Counter-clockwise gobo scroll, slow to fast
		160⇔165	Gobo 1 Shaking
		166⇔170	Gobo 2 Shaking
		171⇔175	Gobo 3 Shaking
		176⇔181	Gobo 4 Shaking
		182⇔186	Gobo 5 Shaking
		187⇔191	Gobo 6 Shaking
		192⇔197	Gobo 7 Shaking
		198⇔202	Gobo 8 Shaking
		203⇔207	Gobo 9 Shaking
		208⇔214	Gobo 10 Shaking
		215⇔218	Gobo 11 Shaking
		219⇔223	Gobo 12 Shaking
		224⇔229	Gobo 13 Shaking
		230⇔234	Gobo 14 Shaking
		235⇔239	Gobo 15 Shaking
		240⇔245	Gobo 16 Shaking
		246⇔250	Gobo 17 Shaking
		251⇔255	Gobo 18 Shaking
16	**Gobo Wheel 2 (Rotating)** [Gobo Designs]	000⇔018	White
		019⇔037	Gobo 1 (Half Moon and Sun)
		038⇔056	Gobo 2 (Broken Triangle)
		057⇔074	Gobo 3 (Star Field)
		075⇔092	Gobo 4 (Radial Star)
		093⇔111	Gobo 5 (Wavy Breakup)
		112⇔129	Gobo 6 (Turning Forks)
		130⇔150	Gobo 1 Shaking
		151⇔171	Gobo 2 Shaking
		172⇔192	Gobo 3 Shaking
		193⇔213	Gobo 4 Shaking
		214⇔234	Gobo 5 Shaking
		235⇔255	Gobo 6 Shaking

30CH

Channel	Function	Value	Percent/Settings
17	**Gobo Wheel 2 Rotation**	000⇔021 022⇔042 043⇔063 064⇔084 085⇔105 106⇔127 128⇔190 191⇔192 193⇔255	0-90 position 90-180 position 180-270 position 270-360 position 360-450 position 450-540 position Clockwise rotating, slow to fast Stop Counter-clockwise rotating, slow to fast
18	**Gobo Wheel 2 Index Fine**	000⇔255	16-bit adjustable, 0–100%
19	**Animation Wheel**	000⇔255	Effect wheel
20	**Animation Wheel Rotation**	000⇔124 125⇔130 131⇔255	Clockwise rotating, fast to slow Stop Counter-clockwise rotating, slow to fast
21	**Prism 1**	000⇔004 005⇔255	No Function Prism Effect
22	**Prism 1 Rotation**	000⇔127 128⇔189 190⇔193 194⇔255	Rotating position Clockwise rotating, slow to fast Stop Counter-clockwise rotating, fast to slow
23	**Prism 2**	000⇔004 005⇔255	No Function Prism Effect
24	**Prism 2 Rotation**	000⇔127 128⇔189 190⇔193 194⇔255	Rotating position Clockwise rotating, slow to fast Stop Counter-clockwise rotating, fast to slow
25	**Frost**	000⇔255	0–100%
26	**Zoom**	000⇔255	0–100%
27	**Focus**	000⇔255	0–100%
28	**Fine Focus**	000⇔255	0–100%
29	**Beam Mode**	000⇔010 011⇔255	No Function Beam Mode
30	**Control**	000⇔029 030⇔039 040⇔049 050⇔059 060⇔069 070⇔079 080⇔089 090⇔099 100⇔109 110⇔119 120⇔129 130⇔139 140⇔149 150⇔159 160⇔169 170⇔179 180⇔189 190⇔199 200⇔209 210⇔219 220⇔229 230⇔239 240⇔245 246⇔250 251⇔255	No function XY swap on XY swap off Zoom/auto focus mode on Zoom/auto focus mode off XY blackout enable XY blackout disable Color blackout enable Color blackout disable Gobo blackout enable Gobo blackout disable Lamp On XY reset Head reset Auto soft filter on Auto soft filter off No function No function All reset All blackout enable All blackout disable Lamp Off No function No function No function

27CH

Channel	Function	Value	Percent/Settings
1	**Pan**	000⇔255	0–100%
2	**Fine Pan**	000⇔255	0–100%
3	**Tilt**	000⇔255	0–100%
4	**Fine Tilt**	000⇔255	0–100%
5	**Pan/Tilt Speed**	000⇔255	0–100%
6	**Dimmer**	000⇔255	0–100%
7	**Shutter**	000⇔007 008⇔015 016⇔131 132⇔167 168⇔203 204⇔239 240⇔247 248⇔255	Closed Open Slow to fast Fast close, slow open Slow close, fast open Pulse effect from slow to fast Random effect from slow to fast Open
8	**Cyan**	000⇔255	0–100%
9	**Magenta**	000⇔255	0–100%
10	**Yellow**	000⇔255	0–100%
11	**Color Wheel 1**	000 028 050 080 100 129 150 181 200 235 255	Open White + Beam Softener Beam Softener Beam Softener + Lavender Lavender Lavender + CTO 3200K CTO 3200K CTO 3200K + (UV) (UV) (UV) + CTO 2500K CTO 2500K
12	**Color Wheel 2**	000 028 050 080 100 129 150 181 200 235 255	Open White + Beam Softener Beam Softener Beam Softener + Dark Green Dark Green Dark Green + Dark Red Dark Red Dark Red + Dark Blue Dark Blue Dark Blue + Minus Green Minus Green
13	**Color Wheel 3**	000 028 050 080 100 129 150 181 200 235 255	Open White + Beam Softener Beam Softener Beam Softener + Dark Orange Dark Orange Dark Orange + Light Orange Light Orange Light Orange + Light Green Light Green Light Green + Pink Pink

27CH

Channel	Function	Value	Percent/Settings
14	**Gobo Wheel 1 (Static)** [Gobo Designs]	000	Open
		004	Gobo 1 (Full Aperture)
		008	Gobo 2 (Aperture 1/3)
		012	Gobo 3 (Aperture 1/2)
		016	Gobo 4 (Aperture 2/3)
		019	Gobo 5 (Aperture 5/6)
		023	Gobo 6 (Triangle dots)
		027	Gobo 7 (Curvy triangle)
		031	Gobo 8 (Random dots)
		035	Gobo 9 (Symmetric dots)
		038	Gobo 10 (Line)
		042	Gobo 11 (Laser Circle)
		046	Gobo 12 (Square Lines)
		050	Gobo 13 (Brick Out)
		054	Gobo 14 (Triangle square)
		057	Gobo 15 (Shades)
		061	Gobo 16 (Crunch Bar)
		065	Gobo 17 (5 Wave)
		069	Gobo 18 (Burst)
		070⇔113	Clockwise gobo scroll, fast to slow
		114⇔117	stop
		118⇔159	Counter-clockwise gobo scroll, slow to fast
		160⇔165	Gobo 1 Shaking
		166⇔170	Gobo 2 Shaking
		171⇔175	Gobo 3 Shaking
		176⇔181	Gobo 4 Shaking
		182⇔186	Gobo 5 Shaking
		187⇔191	Gobo 6 Shaking
		192⇔197	Gobo 7 Shaking
		198⇔202	Gobo 8 Shaking
		203⇔207	Gobo 9 Shaking
		208⇔214	Gobo 10 Shaking
		215⇔218	Gobo 11 Shaking
		219⇔223	Gobo 12 Shaking
		224⇔229	Gobo 13 Shaking
		230⇔234	Gobo 14 Shaking
		235⇔239	Gobo 15 Shaking
		240⇔245	Gobo 16 Shaking
		246⇔250	Gobo 17 Shaking
		251⇔255	Gobo 18 Shaking
15	**Gobo Wheel 2 (Rotating)** [Gobo Designs]	000⇔018	White
		019⇔037	Gobo 1 (Half Moon and Sun)
		038⇔056	Gobo 2 (Broken Triangle)
		057⇔074	Gobo 3 (Star Field)
		075⇔092	Gobo 4 (Radial Star)
		093⇔111	Gobo 5 (Wavy Breakup)
		112⇔129	Gobo 6 (Turning Forks)
		130⇔150	Gobo 1 Shaking
		151⇔171	Gobo 2 Shaking
		172⇔192	Gobo 3 Shaking
		193⇔213	Gobo 4 Shaking
		214⇔234	Gobo 5 Shaking
		235⇔255	Gobo 6 Shaking

27CH

Channel	Function	Value	Percent/Settings
16	**Gobo Wheel 2 Rotation**	000⇔021 022⇔042 043⇔063 064⇔084 085⇔105 106⇔127 128⇔190 191⇔192 193⇔255	0-90 position 90-180 position 180-270 position 270-360 position 360-450 position 450-540 position Clockwise rotating, slow to fast Stop Counter-clockwise rotating, slow to fast
17	**Animation Wheel**	000⇔255	Effect wheel
18	**Animation Wheel Rotation**	000⇔124 125⇔130 131⇔255	Clockwise rotating, fast to slow Stop Counter-clockwise rotating, slow to fast
19	**Prism 1**	000⇔004 005⇔255	No Function Prism Effect
20	**Prism 1 Rotation**	000⇔127 128⇔189 190⇔193 194⇔255	Rotating position Clockwise rotating, slow to fast Stop Counter-clockwise rotating, fast to slow
21	**Prism 2**	000⇔004 005⇔255	No Function Prism Effect
22	**Prism 2 Rotation**	000⇔127 128⇔189 190⇔193 194⇔255	Rotating position Clockwise rotating, slow to fast Stop Counter-clockwise rotating, fast to slow
23	**Frost**	000⇔255	0–100%
24	**Zoom**	000⇔255	0–100%
25	**Focus**	000⇔255	0–100%
26	**Beam Mode**	000⇔010 011⇔255	No Function Beam Mode
27	**Control**	000⇔029 030⇔039 040⇔049 050⇔059 060⇔069 070⇔079 080⇔089 090⇔099 100⇔109 110⇔119 120⇔129 130⇔139 140⇔149 150⇔159 160⇔169 170⇔179 180⇔189 190⇔199 200⇔209 210⇔219 220⇔229 230⇔239 240⇔245 246⇔250 251⇔255	No function XY swap on XY swap off Zoom/auto focus mode on Zoom/auto focus mode off XY blackout enable XY blackout disable Color blackout enable Color blackout disable Gobo blackout enable Gobo blackout disable Lamp On XY reset Head reset Auto soft filter on Auto soft filter off No function No function All reset All blackout enable All blackout disable Lamp Off No function No function No function

Gobo Designs – Rotating and Static Wheels

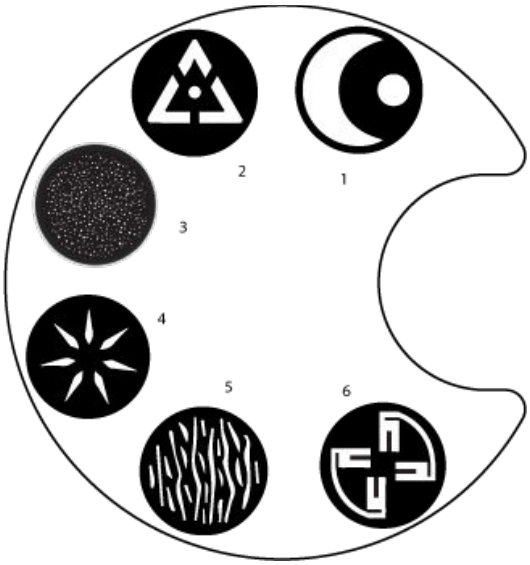

Rotating Gobo Wheel
1. Half Moon and Sun
2. Broken Triangle
3. Star Field
4. Radial Star
5. Wavy Breakup
6. Turning Forks

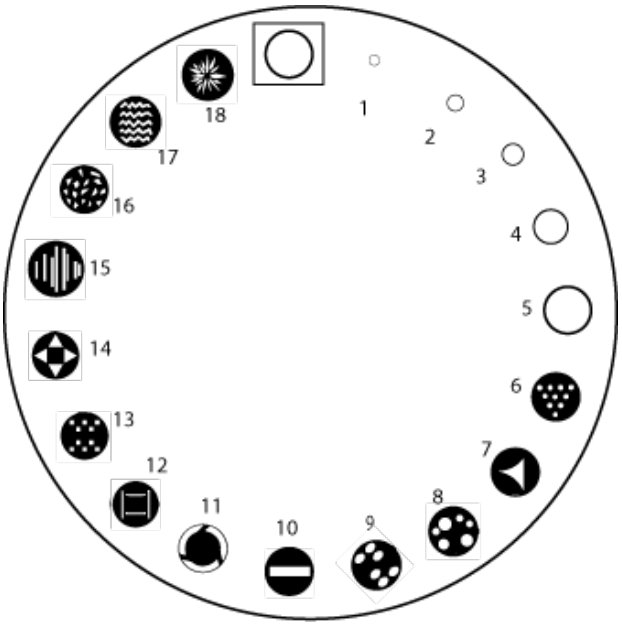

Static Gobo Wheel
1. Full Aperture
2. Aperture 1/3
3. Aperture 1/2
4. Aperture 2/3
5. Aperture 5/6
6. Triangle Dots
7. Curvy Triangle
8. Random Dots
9. Symmetric Dots
10. Line
11. Laser Circle
12. Square Lines
13. Brick Out
14. Triangle Square
15. Shades
16. Crunch Bar
17. 5 Wave
18. Burst

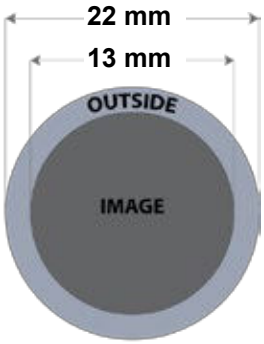

Gobo Wheel 2 Dimensions

Color Wheels

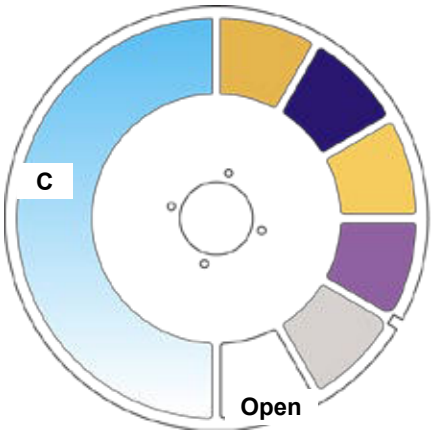

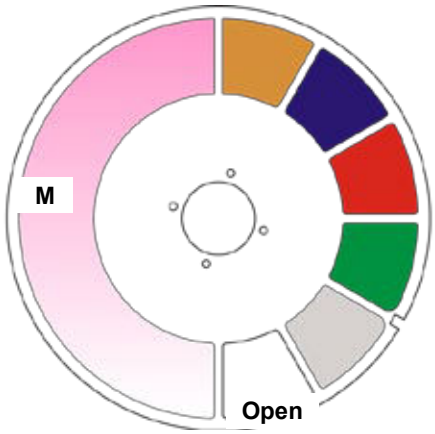

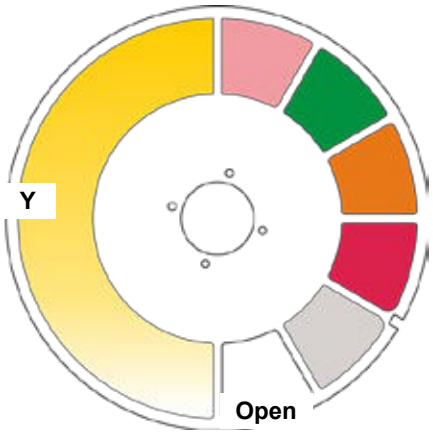

5. Firmware Update

The following steps apply to the Windows® 7 operating system:

Step 1

1. Connect the Maverick MK1 Hybrid to a computer with an ethernet cable.
2. Verify the network with the Maverick MK1 Hybrid is connected to the computer.

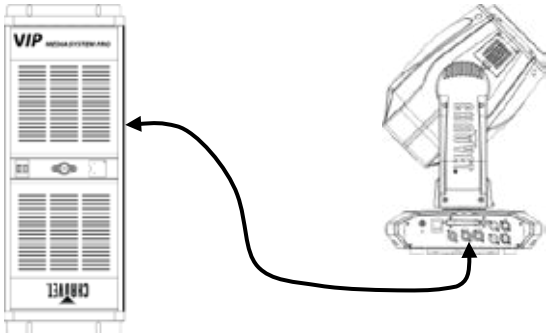

Step 2

1. Set the control protocol on the Maverick MK1 Hybrid to **ArtNet** in **Single Control** mode. (See Single Control Protocol)
2. Set the **IP Mode** to **Static**. (See IP Mode)

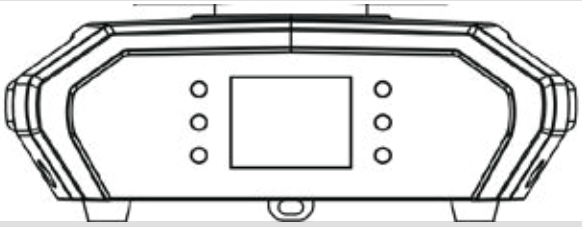

Step 3

On the computer, open the Network and Sharing Center (through the Start Menu, the Control Panel, or the Network icon on the right side of the Taskbar).

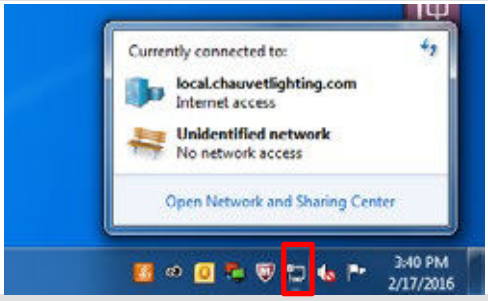

Step 4

Select the network that the product is connected to by clicking the blue text that corresponds to that network on the right side of the window.

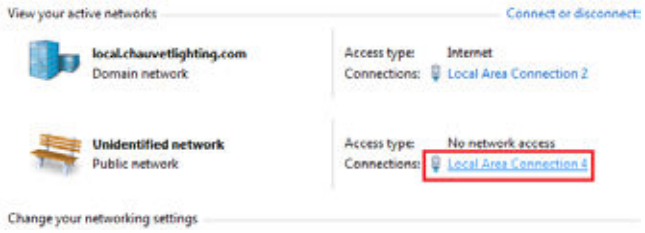

Step 5 Click **Properties** on the **Status** window that pops up.

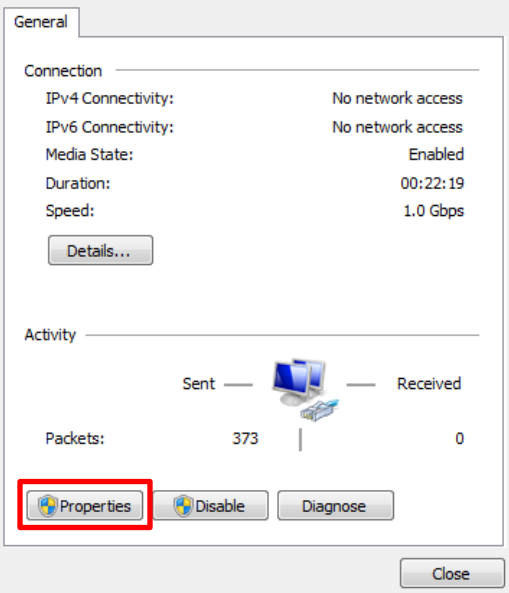

Step 6 On the **Properties** window:

1. Click on **Internet Protocol Version 4 (TCP/IPv4)** to select it.
2. Click **Properties**.

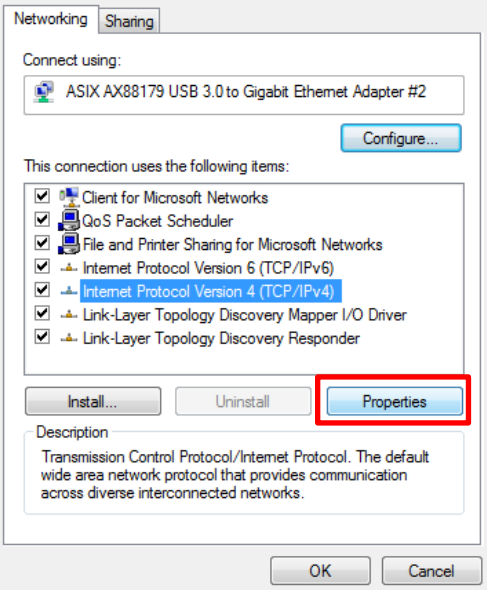

Step 7 On the **TCP/IPv4 Properties** window:

1. Select **Use the following IP address:**
2. Type **2.255.0.0** into the **IP address** bar.
3. Press **<Tab>** on your keyboard. The **Subnet mask** bar should automatically populate as **255.0.0.0**. If not, then enter it manually.
4. Ignore the **Default gateway** bar.

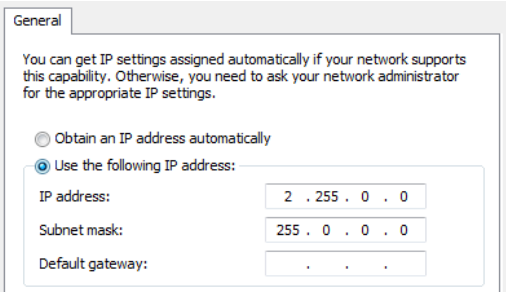

Step 8

1. View the Home Screen on the Maverick MK1 Hybrid. (see Home Screen)
2. Open the internet browser on the computer.
3. Enter the IP address from the Maverick MK1 Hybrid display into the URL bar of the internet browser. (For example, if the display of the product reads **2.11.0.1**, enter **2.11.0.1** into the URL bar of the internet browser.)

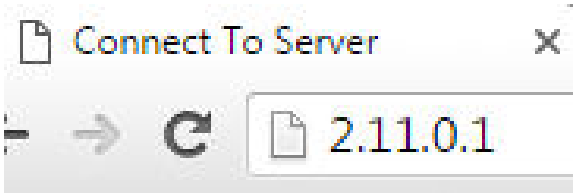

Step 9

On the **Welcome** screen:

1. Enter **admin** as both the **User Name** and **Password**. No capital letters.
2. Press **Log In** on the screen, or **<Enter>** on the keyboard.

If the user name and password do not work, reset the product to factory defaults. (see Factory Reset)

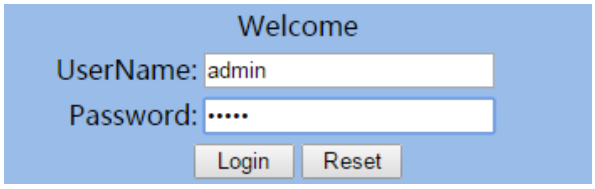

Step 10

On the page that appears, click **Upgrade**.

Step 11

Find the latest Firmware Upgrade on the website at https://www.chauvetprofessional.com/products/maverick-mk2-wash under **DOWNLOADS**.

Step 12

1. Click **Choose File** on the Maverick MK1 Hybrid Upgrade page.
2. In the File Explorer window that pops up, select the Firmware Upgrade file from the website and click **Open**.
3. Click **Upload File**.

A **Downloading** message will appear on the product's display. Once the product finishes installing the firmware, it will reset.

Do NOT turn the product off during this process.

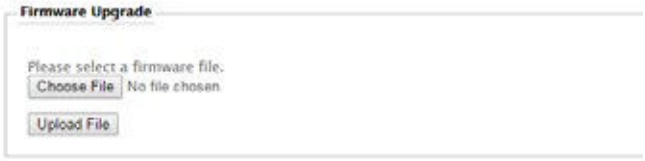

Step 13

On the Maverick MK1 Hybrid, verify the firmware has been updated by navigating to **Sys Info** (System Information) and checking that the version number matches the name of the file on the computer.

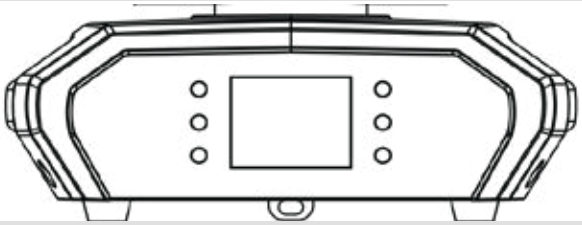

Step 15

Disconnect the Maverick MK1 Hybrid from the computer. The firmware update is complete.

The examples shown are for illustrative purposes.

6. TECHNICAL INFORMATION

Product Maintenance

To maintain optimum performance and minimize wear, you should clean this product frequently. Usage and environment are contributing factors in determining the cleaning frequency.
As a rule, clean this product at least twice a month. Dust build-up reduces light output performance and can cause overheating. This can lead to reduced light source life and increased mechanical wear.
To clean your product:

1. Unplug the product from power.
2. Wait until the product is at room temperature.
3. Use a vacuum (or dry compressed air) and a soft brush to remove dust collected on the external vents.
4. Clean all external surfaces with a mild solution of non-ammonia glass cleaner or isopropyl alcohol.
5. Apply the solution directly to a soft, lint-free cotton cloth or a lens cleaning tissue.
6. Wipe any dirt or grime to the outside edges of the lens surface.
7. Gently polish the lens surfaces until they are free of haze and lint.

Always dry the external surfaces thoroughly and carefully after cleaning them.

Do not spin the cooling fans by blowing compressed air into them.

7. TECHNICAL SPECIFICATIONS

Dimensions and Weight	**Length**	**Width**	**Height**	**Weight**
	15.51 in (394 mm)	12.09 in (307 mm)	24.76 in (629 mm)	66.7 lb (30.3 kg)
	Note: Dimensions in inches rounded to the nearest decimal digit.			
Electrical	**Power Supply Type**	**Range**		**Voltage Selection**
	Switching (internal)	100–240 VAC, 50/60 Hz		Auto-ranging
	Parameter	**120 VAC, 60 Hz**	**208 VAC, 60 Hz**	**230 VAC, 50 Hz**
	Consumption	670 W	648 W	651 W
	Current	5.45 A	3.12 A	2.81 A
	Fuse/Breaker	F 10 A, 250 V	F 10 A, 250 V	F 10 A, 250 V
	Power I/O	**U.S./Canada**		**Worldwide**
	Power input connector	Seetronic Powerkon IP65		Seetronic Powerkon IP65
	Power output connector	Seetronic Powerkon IP65		Seetronic Powerkon IP65
	Power cord plug	Edison (U.S.)		Local plug
Light Source	**Type**	**Power**		**Lifespan**
	Lamp Osram Sirius	440 W		1,500 hours
	Color	**Quantity**		
	7000 K	1		
Photometrics	**Parameter**	**Value**		
	Color Temperature	6207 K (at full)		
	Illuminance @ 15 m (2°)	212,100 lux		
	Illuminance @ 15 m (3°)	123,200 lux		
	Illuminance @ 5 m (18°)	25,800 lux		
	Illuminance @ 5 m (19°)	16,000 lux		
	Illuminance @ 5 m (41°)	2,235 lux		
	Parameter: Beam	**Value**		
	Beam Angle	1°		
	Field Angle	2°		
	Parameter: Spot	**Value**		
	Beam Angle	1° to 6°		
	Field Angle	3° to 18°		
	Zoom Angle	3° to 18°		
	Parameter: Wash	**Value**		
	Beam Angle	9° to 22°		
	Field Angle	19° to 41°		
	Zoom Angle	19° to 41°		
Gobo Dimensions	**Gobo Wheels Outside Diameter**	**Image Diameter**		**Max. Thickness**
	22 mm	13 mm		1.1 mm

DMX	**I/O Connector**	**Channel Range**		
	3- and 5-pin XLR	27 or 30		
Art-Net™/sACN	**I/O Connector**	**Channel Range**		
	Amphenol XLRnet	27 or 30		
Thermal	**Max. External Temperature**	**Cooling System**		
	113 °F (45 °C)	Fan-Assisted Convection		
Ordering	**Product Name**	**Item Name**	**Item Code**	**UPC Number**
	Maverick MK1 Hybrid	MAVERICKMK1HYBRID	08011202	781462215507

UL 1573
CSA C22.2 No. 166
E113093

Photometrics Chart

Light Source - Beam

Distance	Beam Diameter	Field Diameter	Footcandle
15 ft	0.26 ft	0.52 ft	212,100
20 ft	0.35 ft	0.70 ft	119,306
30 ft	0.52 ft	1.05 ft	53,025
40 ft	0.70 ft	1.40 ft	29,827
50 ft	0.87 ft	1.75 ft	19,089
75 ft	1.31 ft	2.62 ft	8,484
100 ft	1.75 ft	3.49 ft	4,772
125 ft	2.18 ft	4.36 ft	3,054
150 ft	2.62 ft	5.24 ft	2,121

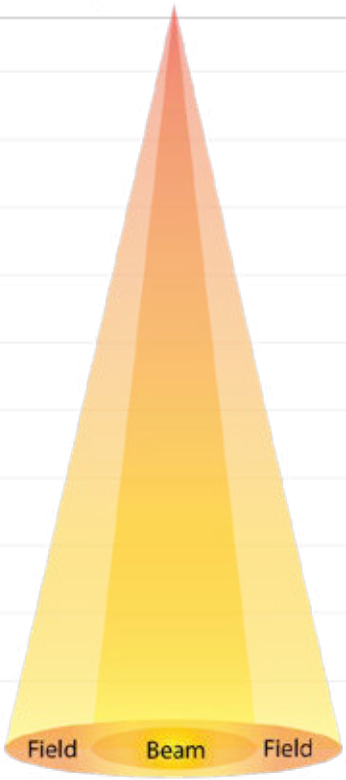

Light Source - Beam

Distance	Beam Diameter	Field Diameter	Lux
1 m	0.02 m	0.03 m	47,722,500
2 m	0.03 m	0.07 m	11,930,625
5 m	0.09 m	0.17 m	1,908,900
8 m	0.14 m	0.28 m	745,664
10 m	0.17 m	0.35 m	477,225
15 m	0.26 m	0.52 m	212,100
20 m	0.35 m	0.70 m	119,306
25 m	0.44 m	0.87 m	76,356
30 m	0.52 m	1.05 m	53,025

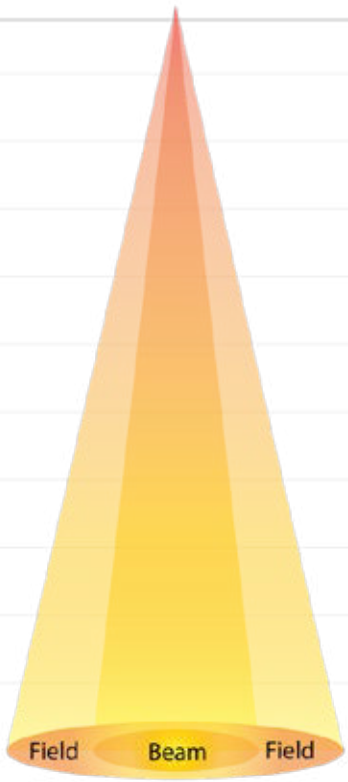

Photometrics Chart

Zoomable Light Source - Spot

	Narrow			Wide		
Distance	Beam Diameter	Field Diameter	Footcandle	Footcandle	Beam Diameter	Field Diameter
15 ft	0.26 ft	0.79 ft	123,200	2,867	1.57 ft	4.75 ft
20 ft	0.35 ft	1.05 ft	69,300	1,613	2.10 ft	6.34 ft
30 ft	0.52 ft	1.57 ft	30,800	717	3.14 ft	9.50 ft
40 ft	0.70 ft	2.09 ft	17,325	403	4.19 ft	12.67 ft
50 ft	0.87 ft	2.62 ft	11,088	258	5.24 ft	15.84 ft
75 ft	1.31 ft	3.93 ft	4,928	115	7.86 ft	23.76 ft
100 ft	1.75 ft	5.24 ft	2,772	65	10.48 ft	31.68 ft
125 ft	2.18 ft	6.55 ft	1,774	41	13.10 ft	39.60 ft
150 ft	2.62 ft	7.86 ft	1,232	29	15.72 ft	47.52 ft

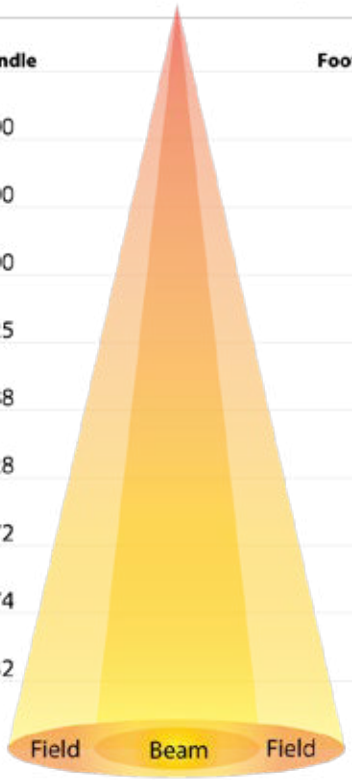

Zoomable Light Source - Spot

	Narrow			Wide		
Distance	Beam Diameter	Field Diameter	Lux	Lux	Beam Diameter	Field Diameter
1 m	0.02 m	0.05 m	27,720,000	645,000	0.10 m	0.32 m
2 m	0.03 m	0.10 m	6,930,000	161,250	0.21 m	0.63 m
5 m	0.09 m	0.26 m	1,108,800	25,800	0.52 m	1.58m
8 m	0.14 m	0.42 m	433,125	10,078	0.84 m	2.53 m
10 m	0.17 m	0.52 m	277,200	6,450	1.05 m	3.17 m
15 m	0.26 m	0.79 m	123,200	2,867	1.57 m	4.75 m
20 m	0.35 m	1.05 m	69,300	1,613	2.10 m	6.34 m
25 m	0.44 m	1.31 m	44,352	1,032	2.62 m	7.92 m
30 m	0.52 m	1.57 m	30,800	717	3.14 m	9.50 m

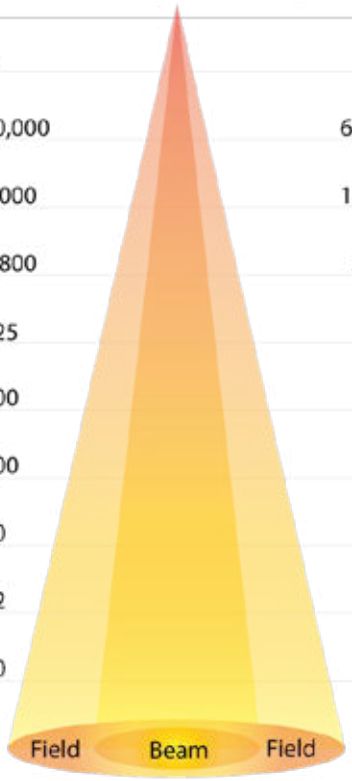

Photometrics Chart

Zoomable Light Source - Wash

	Narrow			Wide		
Distance	Beam Diameter	Field Diameter	Footcandle	Footcandle	Beam Diameter	Field Diameter
15 ft	2.36 ft	5.02 ft	1,778	248	5.83 ft	11.22 ft
20 ft	3.15 ft	6.69 ft	1,000	140	7.78 ft	14.96 ft
30 ft	4.72 ft	10.04 ft	444	62	11.66 ft	22.43 ft
40 ft	6.30 ft	13.39 ft	250	35	15.55 ft	29.91 ft
50 ft	7.87 ft	16.73 ft	160	22	19.44 ft	37.39 ft
75 ft	11.81 ft	25.10 ft	71	10	29.16 ft	56.08 ft
100 ft	15.74 ft	33.47 ft	40	6	38.88 ft	74.78 ft
125 ft	19.68 ft	41.84 ft	26	4	48.60 ft	93.47 ft
150 ft	23.61 ft	50.20 ft	18	2	58.31 ft	112.17 ft

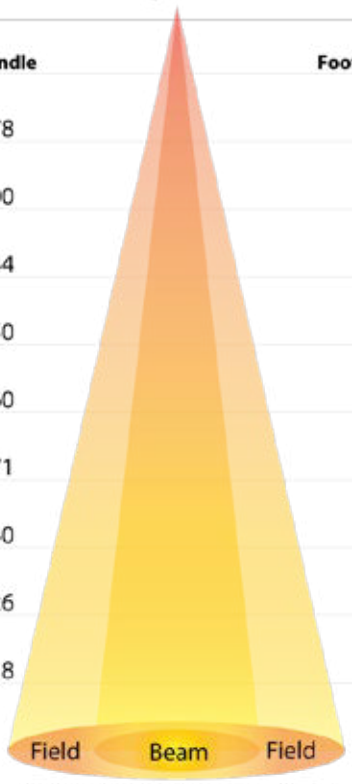

Zoomable Light Source - Wash

	Narrow			Wide		
Distance	Beam Diameter	Field Diameter	Lux	Lux	Beam Diameter	Field Diameter
1 m	0.16 m	0.33 m	400,000	55,875	0.39 m	0.75 m
2 m	0.31 m	0.67 m	100,000	13,969	0.78 m	1.50 m
5 m	0.79 m	1.67 m	16,000	2,235	1.94 m	3.74 m
8 m	1.26 m	2.68 m	6,250	873	3.11 m	5.98 m
10 m	1.57 m	3.35 m	4,000	559	3.89 m	7.48 m
15 m	2.36 m	5.02 m	1,778	248	5.83 m	11.22 m
20 m	3.15 m	6.69 m	1,000	140	7.78 m	14.96 m
25 m	3.94 m	8.37 m	640	89	9.72 m	18.69 m
30 m	4.72 m	10.04 m	444	62	11.66 m	22.43 m

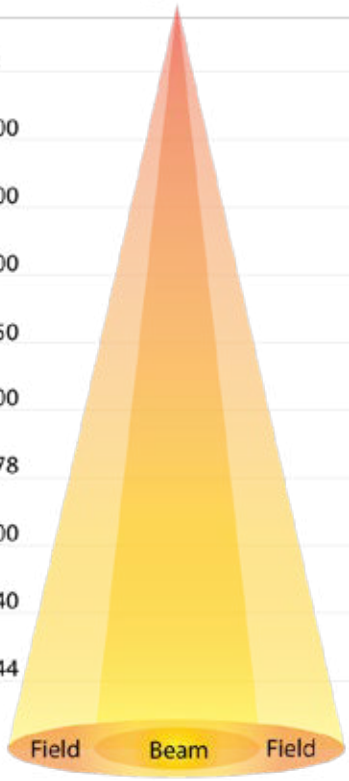

Returns

To get support or return a product:

- If you are located in the U.S., contact Chauvet World Headquarters.
- If you are located in the UK or Ireland, contact Chauvet Europe Ltd.
- If you are located in Mexico, contact Chauvet Mexico.
- If you are located in Benelux, contact Chauvet Europe BVBA.

If you are located in any other country, DO NOT contact Chauvet. Instead, contact your local distributor. See www.chauvetlighting.com for distributors outside the U.S., UK, Ireland, Mexico, or Benelux.

If you are located outside the U.S., UK, Ireland, Mexico, or Benelux, contact your distributor of record and follow their instructions on how to return Chauvet products to them. Visit our website www.chauvetlighting.com for contact details.

Call the corresponding Chauvet Technical Support office and request a Return Merchandise Authorization (RMA) number before shipping the product. Be prepared to provide the model number, serial number, and a brief description of the cause for the return.
Send the merchandise prepaid, in its original box, and with its original packing and accessories. Chauvet will not issue call tags.
Clearly label the package with the RMA number. Chauvet will refuse any product returned without an RMA number.

Write the RMA number on a properly affixed label. DO NOT write the RMA number directly on the box.

Before sending the product, clearly write the following information on a piece of paper and place it inside the box:

- Your name
- Your address
- Your phone number
- RMA number
- A brief description of the problem

Be sure to pack the product properly. Any shipping damage resulting from inadequate packaging will be your responsibility. FedEx packing or double-boxing are recommended.

Chauvet reserves the right to use its own discretion to repair or replace returned product(s).

CONTACT US

USA WORLD HEADQUARTERS

General Information – Chauvet
Address: 5200 NW 108th Avenue
Sunrise, FL 33351
Voice: (954) 577-4455
Fax: (954) 929-5560
Toll free: (800) 762-1084

Technical Support
Voice: (844) 393-7575
Fax: (954) 756-8015
Email: chauvetcs@chauvetlighting.com

World Wide Web
www.chauvetprofessional.com

EUROPE

General Information - Chauvet Europe BVBA
Address: Stokstraat 18
9770 Kruishoutem
Belgium
Voice: +32 9 388 93 97

Technical Support
Email: Eutech@chauvetlighting.eu

World Wide Web
www.chauvetprofessional.eu

General Information - Chauvet Europe Ltd.
Address: Unit 1C
Brookhill Road Industrial Estate
Pinxton, Nottingham, UK
NG16 6NT
Voice: +44 (0)1773 511115
Fax: +44 (0)1773 511110

Technical Support
Email: uktech@chauvetlighting.com

World Wide Web
www.chauvetprofessional.eu

General Information - Chauvet France
Address: 3, Rue Ampère
91380 Chilly-Mazarin
France
Voice: +33 1 78 85 33 59

Technical Support
Email: FRtech@chauvetlighting.eu

World Wide Web
www.chauvetprofessional.eu

General Information - Chauvet Germany
Address: Bruno-Bürgel-Str 11
28759 Bremen
Germany
Voice: +49 421 62 60 20

Technical Support
Email: uktech@chauvetlighting.com

World Wide Web
www.chauvetprofessional.eu

MEXICO

General Information - Chauvet Mexico
Address: Av. de las Partidas 34, 3-B
(Entrance by Calle 2)
Zona Industrial Lerma
Lerma, Edo. de México, CP 52000
Voice: +52 (728) 690-2010

Technical Support
Email: servicio@chauvet.com.mx

World Wide Web
www.chauvetprofessional.mx

Outside the U.S., United Kingdom, Ireland, Mexico, or Benelux contact the dealer of record. Follow their instructions to request support or to return a product. Visit our website for contact details.

UL 1573
CSA C22.2 No. 166
E113093